KETTLER

Assembly and Operating Instructions

max. 110 kg

~ 30 Min.

52 kg

L 115 | W 62 | H 160

FSKCT1019100.01.03

Art. No.K-CT1019-100

NOVA M

Content

1	GENERAL INFORMATION	8
1.1	Technical Data	8
1.2	Personal Safety	9
1.3	Electrical Safety	10
1.4	Set-Up Place	11
2	ASSEMBLY	12
2.1	General Instructions	12
2.2	Scope of Delivery	13
2.3	Assembly	15
3	OPERATING INSTRUCTIONS	30
3.1	Console display	30
3.2	Display	31
3.3	Quickstart	32
3.4	User defined Programs	32
3.5	Pausing or Ending a Workout	33
3.6	RECOVERY – Recovery Pulse Phase	33
4	WORKOUT TIPS	34
4.1	General Instructions	34
4.1.1	Training clothes	34
4.1.2	Warming up and stretching	34
4.1.3	Medication	35
4.1.4	Used muscle groups	35
4.1.5	Exercise frequency	35
4.2	Workout journal	37
4.3	Wireless Connection and Fitness Apps	38
5	STORAGE AND TRANSPORT	39
5.1	General Instructions	39
5.2	Transportation Wheels	39
6	TROUBLESHOOTING, CARE AND MAINTENANCE	39
6.1	General Instructions	39
6.2	Faults and Fault Diagnosis	40
6.3	Error Codes and Troubleshooting	40
6.4	Maintenance and Inspection Calendar	41

7 DISPOSAL 41

8 RECOMMENDED ACCESSORIES 42

9 ORDERING SPARE PARTS 43

9.1 Serial Number and Model Name 43
9.2 Parts List 44
9.3 Exploded Drawing 46

10 WARRANTY 47

11 CONTACT 49

Dear customer,
Thank you for choosing a Kettler fitness device. Kettler Sport represents tradition, durability, and quality like no other home fitness brand. Classic home trainers such as the Golf have accompanied users for decades. At the same time, Kettler stands for innovation and continuously develops thoughtful solutions, particularly in usability and training comfort.

Kettler Sport provides everything you need for successful training at home: cardio and strength equipment, as well as a wide range of fitness accessories.

Further information can be found at www.fitshop.com/kettler.

Intended Use

The equipment may only be used for its intended purpose.

The equipment is only suitable for home use. The equipment is not suitable for semi-professional (e.g. hospitals, associations, hotels, schools, etc.) and commercial or professional use (e.g. fitness studios).

Legal Notice

Fitshop GmbH
Europe's No. 1 for home fitness

International Headquarters
Flensburger Straße 55
24837 Schleswig
Germany

Management:
Christian Grau
Sebastian Campmann
Dr. Bernhard Schenkel

No. HRB 1000 SL
Local Court Flensburg
European VAT Number: DE813211547

Disclaimer

Since December 19, 2024, the trademark rights to © Kettler for fitness equipment in the EU, EFTA, and Turkey are held by Fitshop GmbH. All rights reserved. Any use of this trademark without the explicit written permission of Fitshop is prohibited.

Product and manual are subject to change. Technical data can be changed without advance notice.

FITSHOP

Europe's No.1 for Home Fitness

ABOUT THIS MANUAL

Please carefully read the entire manual before installation and first use. The manual will help you to quickly set up the system and explains how to safely use it. Make sure that all persons exercising with the equipment (especially children and persons with physical, sensory, mental or motor disabilities) are informed about this manual and its contents in advance. In case of doubt, responsible persons must supervise the use of the equipment.

Due to ongoing changes and software optimisations, the manual may have to be updated. If you notice any discrepancies during assembly or use, please refer to the manual uploaded to the webshop. The latest manual is always available there.

This equipment has been manufactured according to the latest safety knowledge. As far as possible, potential safety hazards which could cause injury have been eliminated. Make sure to carefully follow the instructions and that all parts are securely in place. If required, read through the instructions again to correct any mistakes.

Training devices must be classified according to accuracy and use. Accuracy classes are only applicable to devices that display training data.

Accuracy classes

Class A: high accuracy.
Class B: medium accuracy.
Class C: low accuracy.

The use classes explain the intended use of the training device.

Use classes

Class S (studio): professional and/or commercial use.
These training devices are intended for the use in training rooms of facilities such as sports clubs, school facilities, hotels, clubs and studios whose access and supervision is specifically regulated by the owner (person with legal responsibility).

Class H (home use): use at home.
These stationary training devices are intended for the use in private homes where access to the training device is regulated by the owner (person with legal responsibility).

Please pay close attention to the safety and maintenance instructions given here. The contract partner cannot be held liable for damage to health, accidents or damage to the equipment when it is not used in accordance with these instructions.

The following safety instructions may appear in this manual:

► **ATTENTION**
This notice indicates potentially hazardous situations which, if not avoided, may result in property damage.

⚠ **CAUTION**
This notice indicates potentially hazardous situations which, if not avoided, may result in slight or minor injuries!

⚠ **WARNING**
This notice indicates potentially hazardous situations which, if not avoided, may result in death or serious injuries!

⚠ **DANGER**
This notice indicates potentially hazardous situations which, if not avoided, will result in death or serious injuries!

ⓘ **NOTICE**
This notice indicates further useful information.

Retain these instructions in a safe place for future reference, maintenance or when ordering replacement parts.

1.1 Technical Data

Weight and dimensons:

Item weight (gross, including packaging):	55.7 kg
Item weight (net, without packaging):	52 kg
Packaging dimensions (L x W x H):	115 cm x 43 cm x 56 cm
Assembled dimensions (L x W x H):	155 cm x 62 cm x 160 cm
Maximum user weight:	110 kg
Usage class:	H

1.2 Personal Safety

⚠ **DANGER**

+ Before you start using the equipment, you should consult your physician that this type of exercise is suitable for you from a health perspective. Particularly affected are persons who: have a hereditary disposition to high blood pressure or heart disease, are over the age of 45, smoke, have high cholesterol values, are overweight and/or have not exercised regularly in the past year. If you are under medical treatment that affects your heart rate, medical advice is absolutely essential.
+ Note that excessive training can seriously endanger your health. Please also note that heart rate monitoring systems can be inaccurate. If you notice any signs of weakness, nausea, dizziness, pain, shortness of breath, or other abnormal symptoms, stop exercising immediately and seek advice from your doctor if necessary.
+ The owner must communicate all warnings and instructions to the user.

⚠ **WARNING**

+ This equipment may not be used by children under the age of 14.
+ Children should not be allowed unsupervised access to the equipment.
+ Persons with disabilities must have a medical license and must be under strict observation when using the equipment.
+ The equipment is strictly for use by one person at a time.
+ If your equipment provides a safety key, the clip of the safety key must be attached to your clothing before starting your training. In the event of a fall, the EMERGENCY STOP of the equipment can be initiated.
+ There is a risk of injury from spinning pedals and/or an exposed flywheel in the absence of a freewheel. Never get on or off the equipment when the pedals or the flywheel are still moving. Always make sure that the pedals and the flywheel have come to a complete stop.
+ Support yourself with at least one hand on the handlebar when getting on and off the equipment. Only dismount from the equipment when the pedals have come to a complete stop.
+ Keep your hands, feet and other body parts, hair, clothing, jewellery and other objects well clear of moving parts.
+ During use, wear suitable sports clothing rather than loose or baggy clothing. When wearing sports shoes, make sure they have suitable soles, preferably made of rubber or other non-slip materials. Shoes with heels, leather soles, studs or spikes are unsuitable. Never exercise barefoot.

⚠ **CAUTION**

+ If your equipment needs to be connected to the power supply with a mains cable, make sure that the cable is not a potential tripping hazard.
+ Make sure that nobody is within the range of motion of the equipment during training so as not to endanger you or other persons.
+ Always tighten the pedal strap before you start training to prevent your feet from slipping.

CAUTION

+ Be aware that if adjustment devices are left protruding, they may impede the user's movement.

ATTENTION

+ Do not insert any objects of any kind into the openings of the device.
+ To protect the equipment from use by unauthorised third parties, always remove the power cable (if existing) when not in use and store it in a safe place that is inaccessible to unauthorised persons (e.g. children).
+ Class B and C crank training equipment is not suitable for high accuracy purposes.

1.3 Electrical Safety

DANGER

+ In order to reduce the risk of an electric shock, always unplug the equipment from the mains socket immediately after your workout, before assembly or dismantling, and before maintenance or cleaning. Do not pull on the cable.

WARNING

+ Do not leave the equipment unattended while the mains cable is plugged into the mains socket. During your absence, the mains cable must be removed from the mains socket to prevent improper use by third parties or children.
+ If the mains cable or plug is damaged or defective, contact your contract partner. Until repair, the equipment must not be used.

ATTENTION

+ The equipment requires a mains connection of 220-230 V with 50 Hz mains voltage.
+ The equipment may only be connected directly to an earthed socket using the supplied mains cable. Extension cables must conform to VDE guidelines. Always completely unwind the mains cable.
+ The socket must be protected by a fuse with a minimum fuse rating of "16 A, slow blow".
+ Do not make any changes to the mains cable or the mains plug.
+ Keep the mains cable away from water, heat, oil and sharp edges. Do not route the mains cable underneath the equipment or under a carpet or rug, and do not place any objects on top of it.
+ If your purchased item is equipped with a TFT console, software updates must be carried out regularly. Follow the instructions on the console to perform the update(s).
+ The software systems on gym equipment with TFT consoles are set up only for the pre-installed apps. Do not install any additional apps.

NOTICE

+ The pre-installed apps on TFT consoles are produced and provided by external manufacturers. Fitshop does not take any responsibility for the availability, functionality or contents of these apps.
+ Hereby, Fitshop GmbH declares that the radio equipment type Wireless Connection (2.402 – 2.480 GHz) complies with Directive 2014/53/EU. The full text of the EU Declaration of Conformity is available at the following website: www.fitshop.com.

1.4 Set-Up Place

⚠ **WARNING**

+ Do not place the equipment in main corridors or escape routes.

⚠ **CAUTION**

+ Choose a location in which to place the equipment such that there is enough free space/ clearance to the front, the rear and to the sides of the equipment.
+ The training room should be well ventilated during training and not be exposed to any draughts.
+ Choose the place in which to set up the equipment such that there is enough free space/ clearance to the front, the rear and to the sides of the equipment.
+ The free area in the direction from which the exercise equipment is accessed must be at least 0.6 m larger than the exercise area.
+ The set-up and mounting surface of the equipment should be flat, loadable and solid.

► **ATTENTION**

+ The device may only be used in one building, in sufficiently tempered and dry rooms (ambient temperatures between 10°C and 35°C). The equipment should not be used outdoors or in rooms with high humidity (over 70%) like swimming pools.
+ A floor protective mat/equipment underlay can help to protect high-quality floor coverings (parquet, laminate, cork, carpets) from dents and sweat and can help to level out slight unevenness.
+ For Class S equipment, the exercise equipment may only be used in areas where access, supervision and control are specifically regulated by the owner.

2.1 General Instructions

⚠ **DANGER**

+ Do not leave any tools, packaging materials such as foils or small parts lying around, as otherwise there is a danger of suffocation for children. Keep children away from the equipment during assembly.

⚠ **WARNING**

+ Pay attention to the instructions attached to the equipment in order to reduce the risk of injuries.

⚠ **CAUTION**

+ Ensure to have sufficient room for movement in each direction during assembly.
+ The assembly of the equipment must be carried out by at least two adults. If in doubt, seek the help of a third technically skilled person.

► **ATTENTION**

+ To prevent damage to the equipment and the floor, assemble the equipment on a mat or packaging board.

ⓘ **NOTICE**

+ In order to make the assembly as simple as possible, some screws and nuts to be used can already be pre-assembled.
+ Ideally, assemble the equipment at its later set-up place.

2.2 Scope of Delivery

The scope of delivery consist of the following parts. At the beginning, check whether all parts and tools belonging to the device are included in the scope of delivery and whether damage has occurred. In the event of complaints, the contractual partner must be contacted directly.

⚠ **CAUTION**
If parts of the scope of delivery are missing or damaged, the assembly must not be carried out.

Required tools:

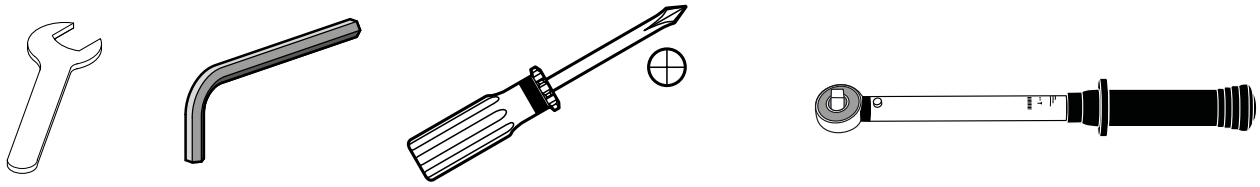

	Stck.
	1
	1
	1
	1
	1
6x M8x20	1
4x M5x12 UT688X	1
1x M5x16	1
2/4x M5x12	1
	1
2x M5x16	1
2/1x M5x12	1

	M6	4
		2
	M8x60	4
	M8x55	2
	M8x40	4
	M8x25	2
	M8x20	4
	M6x50	4
	ø 8x19	4
	ø 8x25	4
	ø 8	4
	ø 17,5x25	4
	ø 8x16	6
	ø 8x19	4
	M 8	6
	ø 6	4
	ø 6	4
	ø 17x22	2
	3x16	4
	3x20	12

2.3 Assembly

Before starting the assembly, carefully review the assembly steps and follow the specified order.

ⓘ **NOTICE**

+ First, loosely fasten all parts and check their proper fit. Use the provided tool to fully tighten the screws only when instructed to do so.
+ Do not overtighten screws and bolts, as this may cause damage.
+ If you have difficulty recognizing the graphics, we recommend opening the PDF manual available in the webshop on your device (e.g., smartphone, tablet, or PC). This allows you to zoom in for a closer view. Please ensure that Adobe Acrobat Reader is installed on your device to open the file.

Step 1: Assembly of the Support Feet

1. Attach the two support feet (F-2 and G-2) to the main frame (D-13) using four screws (M8x60) and four washers (Ø8x19).
2. Tighten the screws securely.

Step 2: Alignment of the Support Feet

If the floor is uneven, you can stabilize the equipment by adjusting the two leveling screws under the main frame.

1. Lift the device on the desired side and turn the leveling screw underneath the main frame.
2. Turn the screw clockwise to extend it and raise the device.
3. Turn it counterclockwise to lower the device.

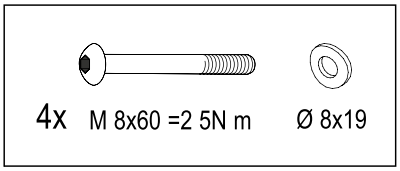

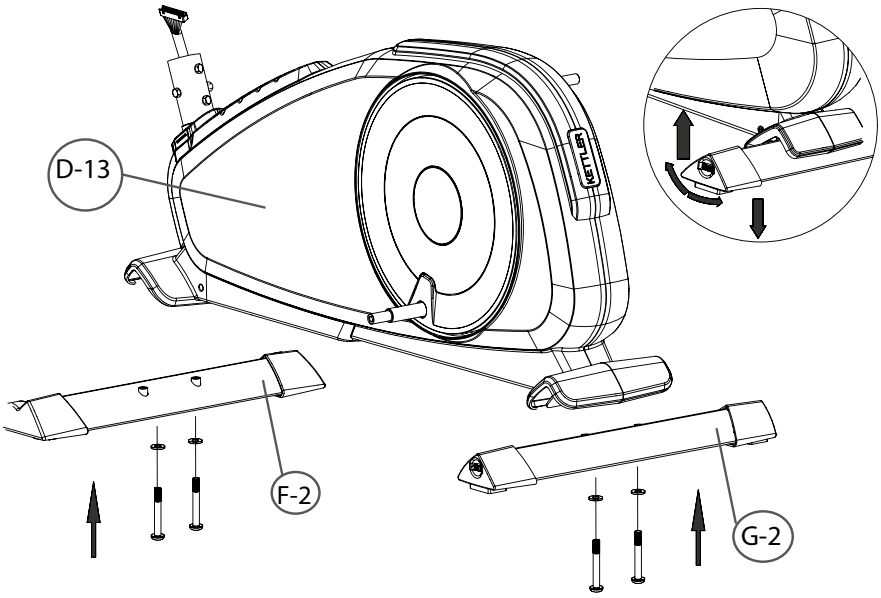

Step 3: Assembly of the Pedal Arms

1. Attach the two pedal arms (H-L and H-R) to the main frame (D-13) using two washers (Ø17.5x25), two bushings (Ø17x22), two washers (Ø8x25), two spring washers (Ø8x12.9), two screws (M8x20), and two end caps.
2. Tighten the screws securely.

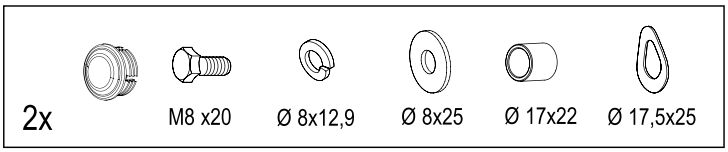

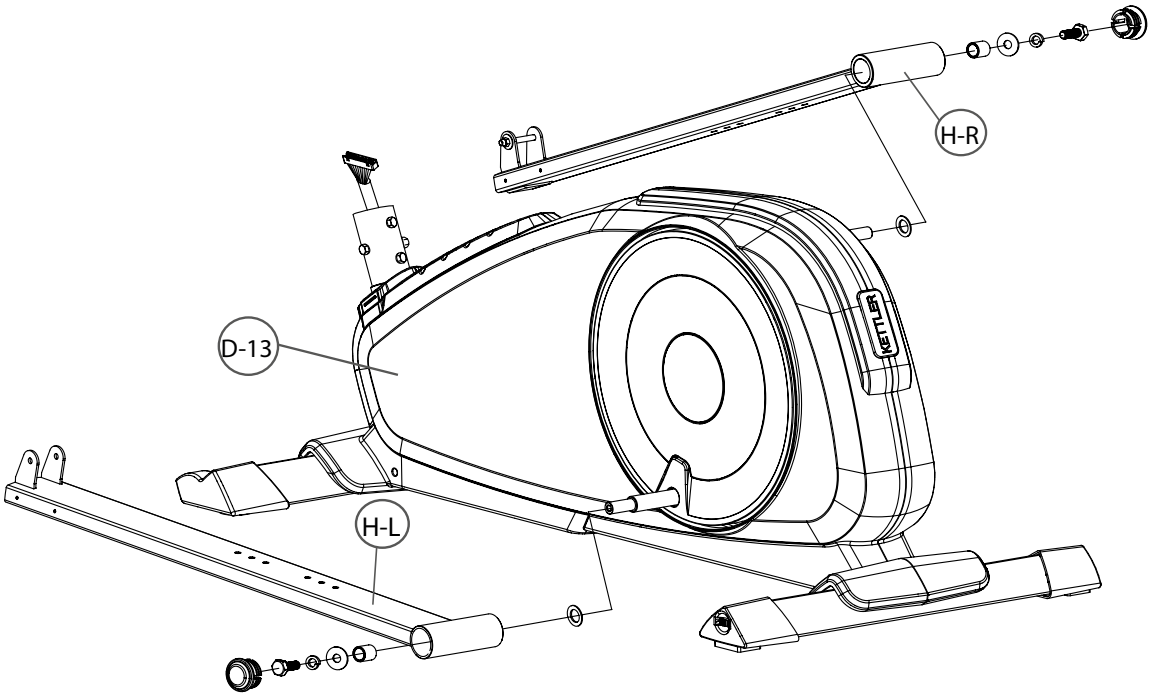

Step 4: Assembly of the Pedals

1. Attach the two pedals (H-1 and H-4) to the pedal arms (H-L and H-R) using four screws (M6x50), four washers (Ø6), four spring washers (Ø6), and four knobs (M6).

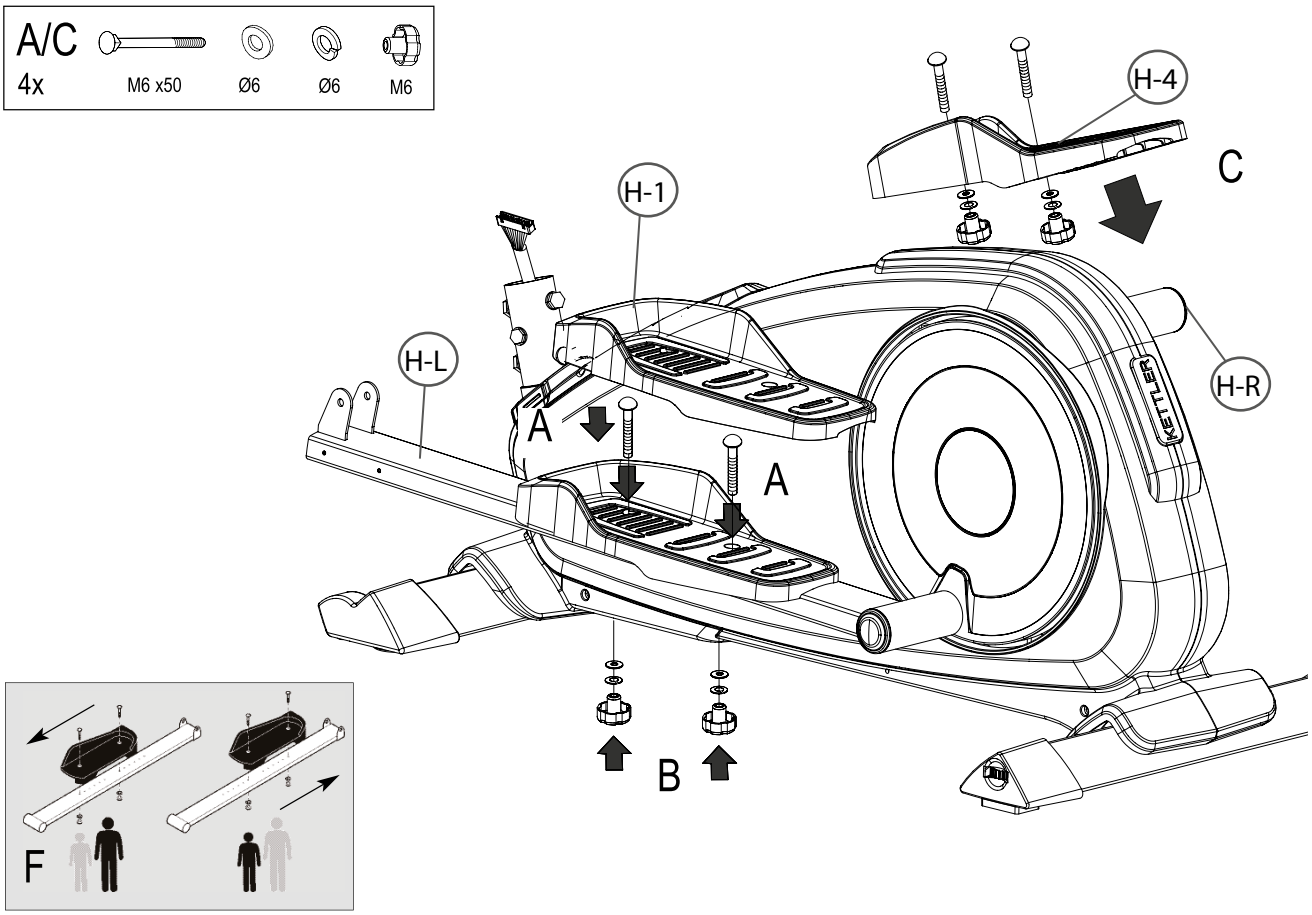

Step 5: Assembly of the Handlebar

1. Attach the handlebar (B-1) to the console mast (D) using two screws (M8x25) and two washers (Ø8).

⚠ **CAUTION**
Be careful not to pinch the cables during the following steps.

2. Guide the cables (B-2) of the handlebar (B-1) through the opening in the console mast (D).
3. Tighten the screws securely.

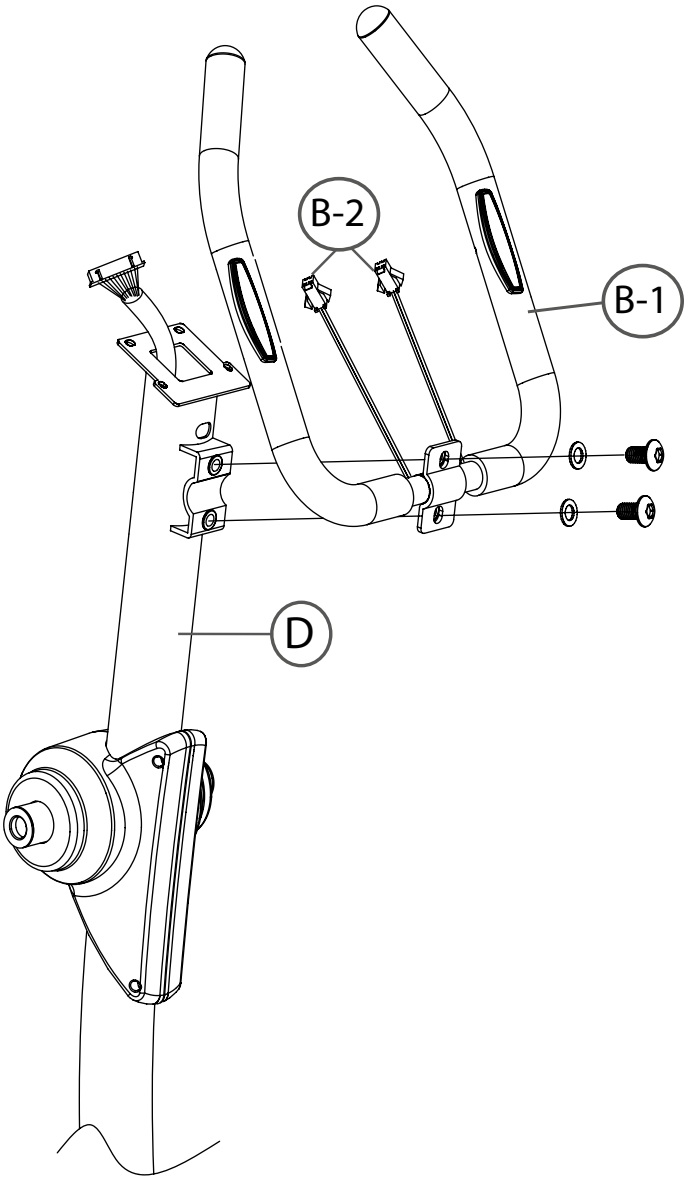

Step 6: Attaching the Resistance Controller

1. Secure the resistance controller (D-4) to the console mast (D) using one screw (M5x16).

⚠ **CAUTION**
Ensure that the cables at the bottom end of the console mast remain accessible.

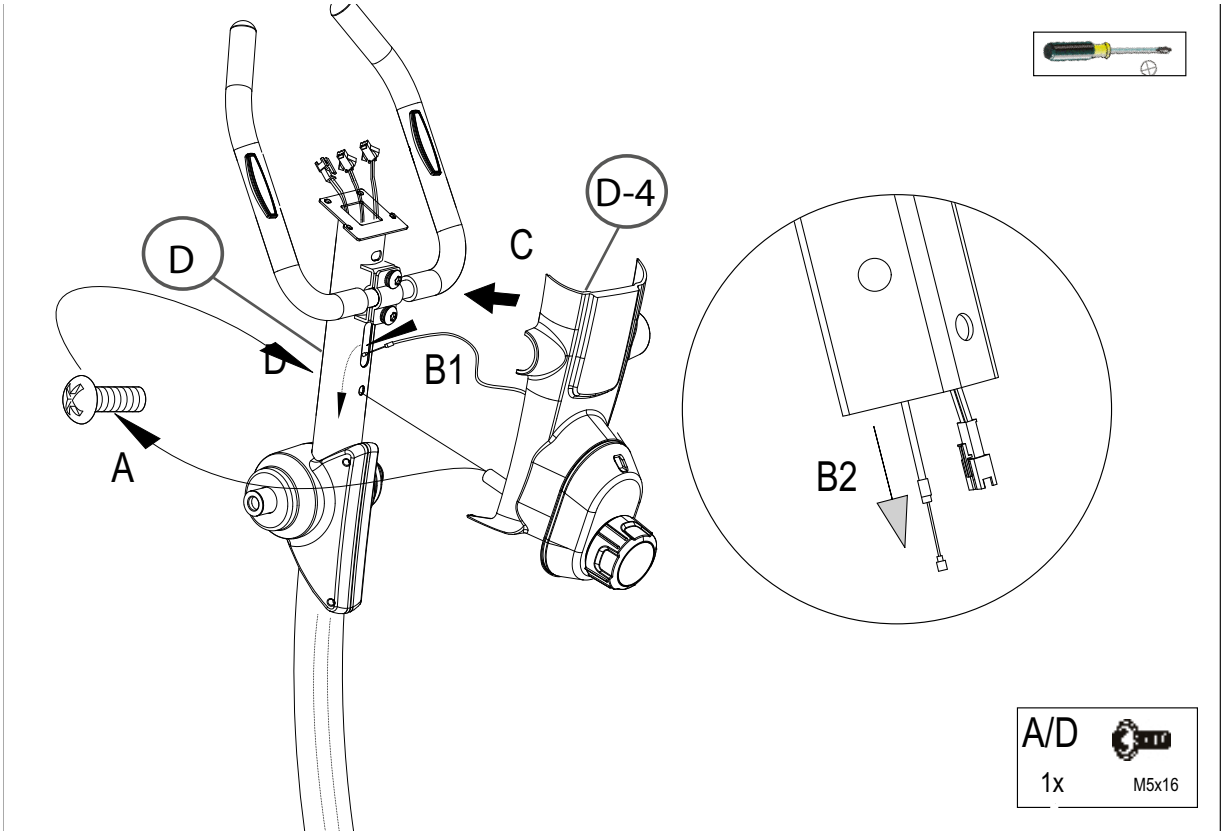

Step 7: **Assembly of the Console**

1. Remove the four pre-assembled screws (M5x12) from the console bracket (A).

⚠ **CAUTION**
Be careful not to pinch the cables during the following steps.

2. Guide the cables (B-2 and D-7) through the console bracket (A).
3. Attach the console bracket (A-2) to the console mast (D) using the four screws (M5x12) removed in the first step.

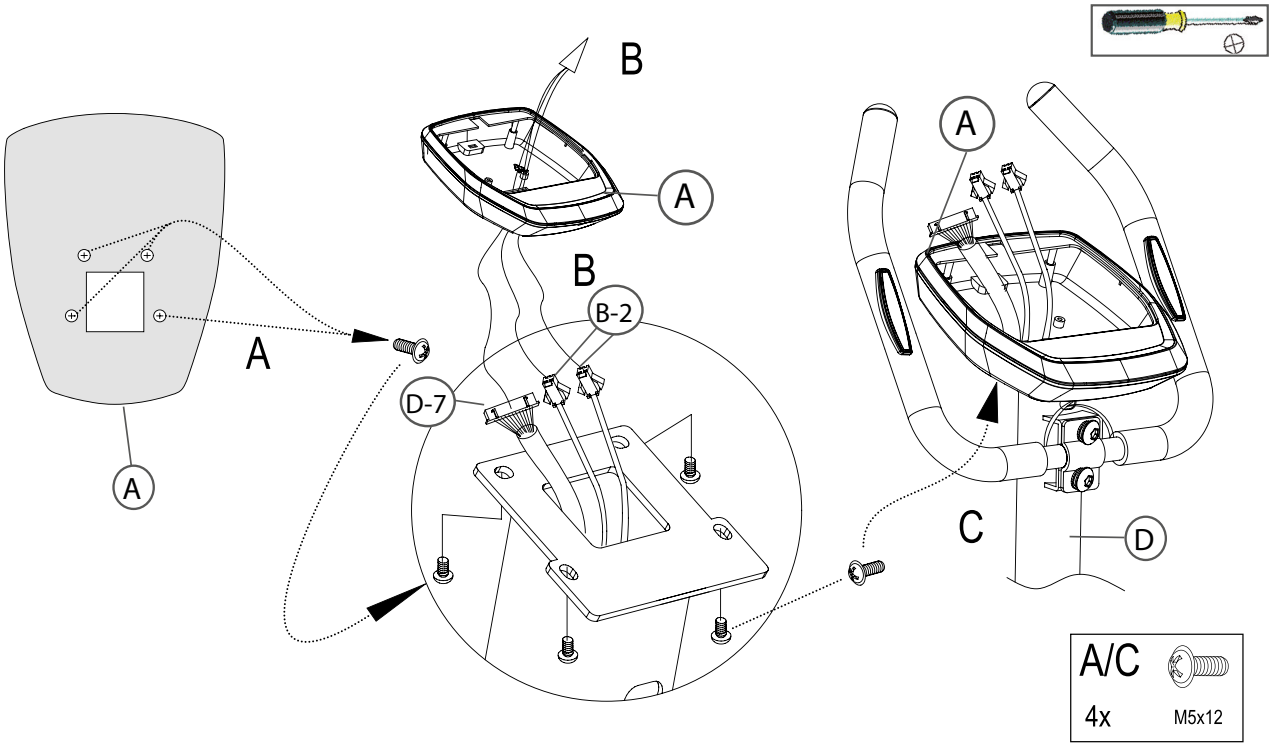

Step 8: Attaching the Console

1. Connect the console cables to each other.
2. Snap the console (A-2) into the console bracket (A).

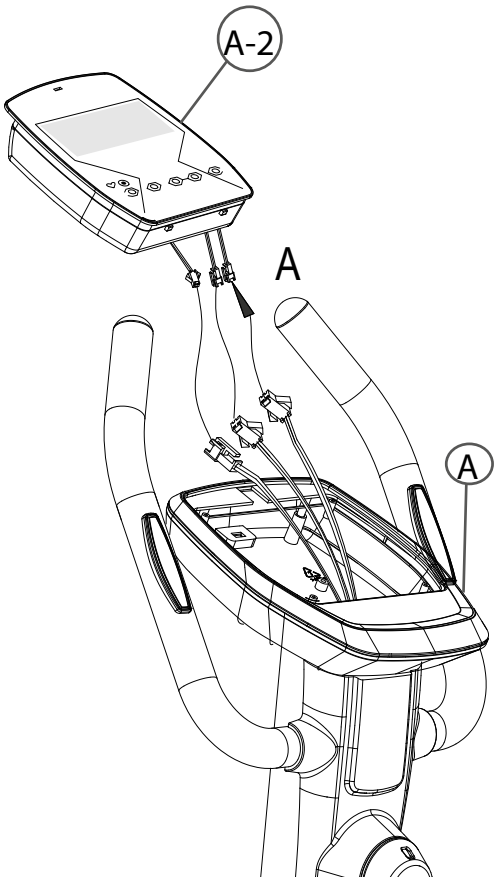

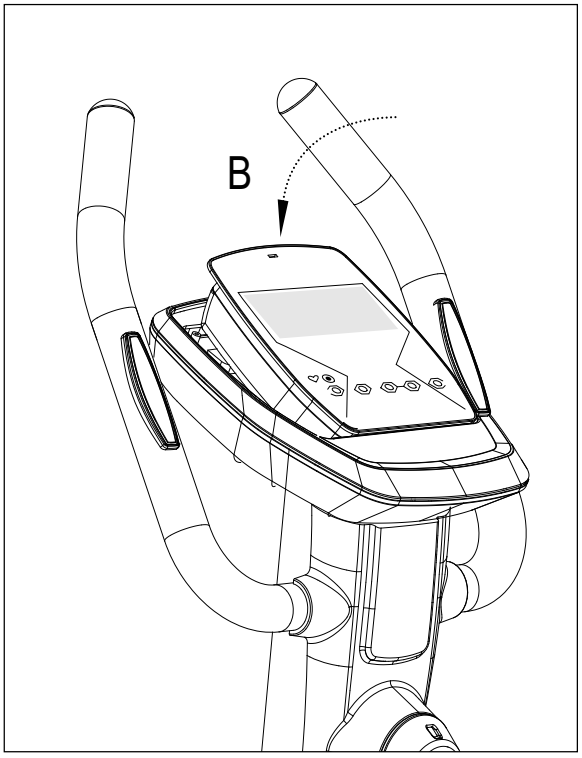

Step 9: Attaching the Resistance Controller Cover

1. Attach the resistance controller cover (D-5) to the console mast (D) using two screws (M5x16) and four screws (3x16).
2. Tighten the screws securely.

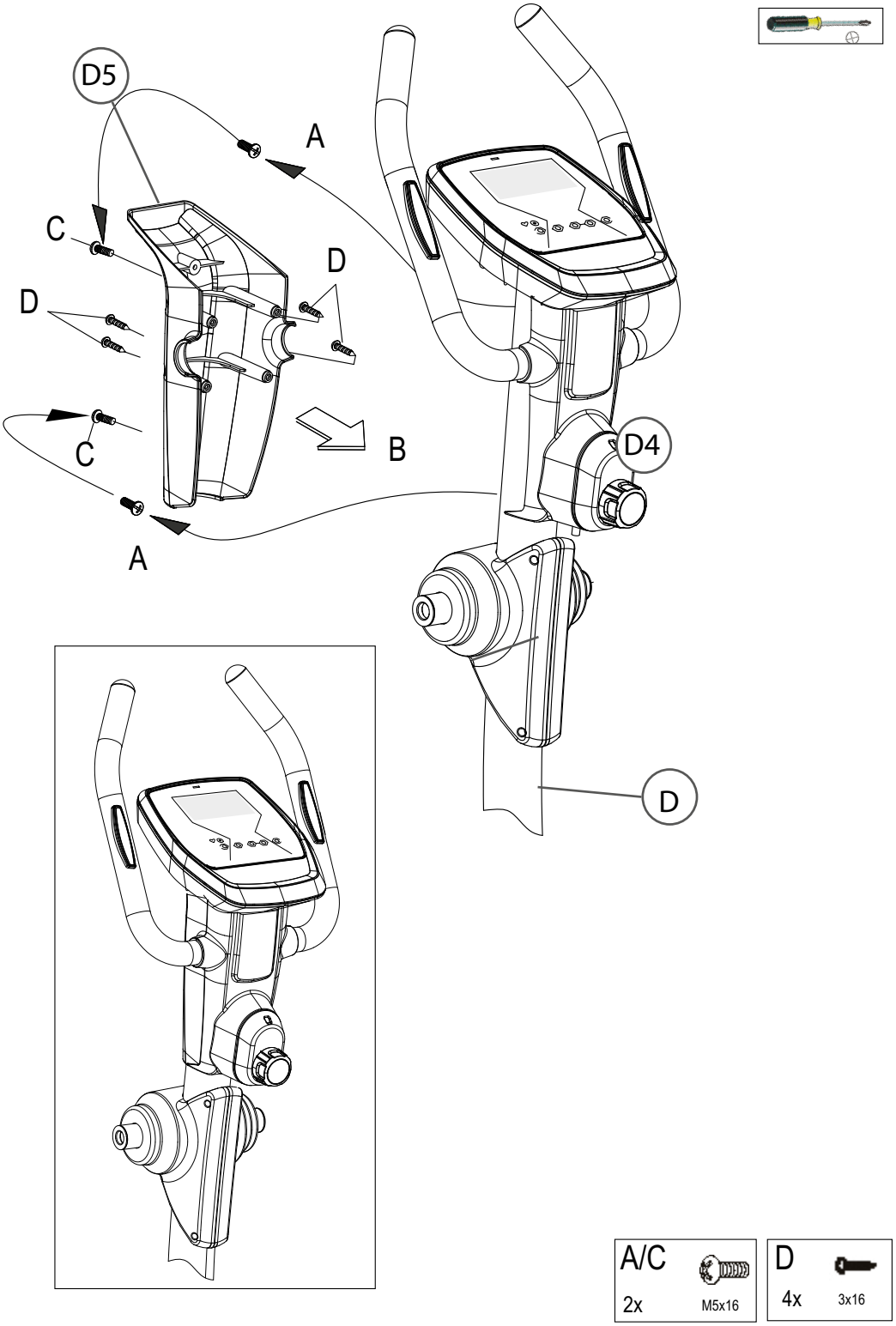

Step 10: Assembly of the Console Mast

1. Remove the six pre-assembled screws (M8x20) and six washers (Ø8) from the main frame (D-13).
2. Slide the console mast cover (D-6) over the console mast (D).

⚠ **CAUTION**
Be careful not to pinch the cables during the following steps.

3. Connect the upper cable (D-7) to the lower cable (D-8).
4. Attach the console mast (D) to the main frame (D-13) using the six screws (M8x20) and six washers (Ø8) removed in the first step.
5. Slide the console mast cover (D-6) from the console mast (D) onto the main frame (D-13).
6. Tighten the screws securely.

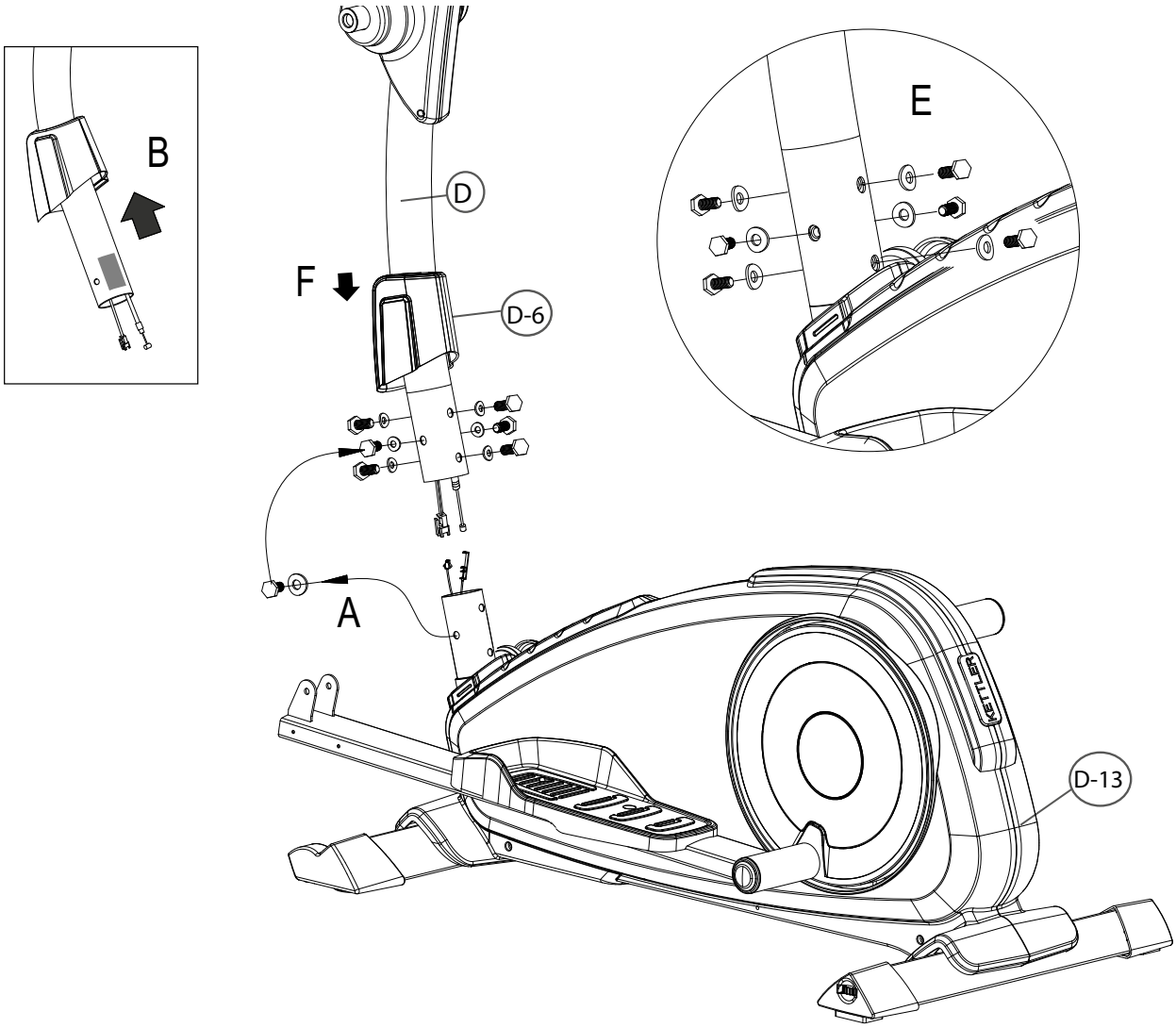

Step 10.1: Securing the Resistance Cable

1. Set the resistance to 8 to extend the resistance cable.
2. Insert the resistance cable into the resistance bracket.
3. Set the resistance to 1.
4. Loosen the plastic lock. You can dispose of this.
5. Connect the console cables together.
6. Secure the console mast (C) to the main frame (D).
7. Attach the cap (C5) to the main frame (D).

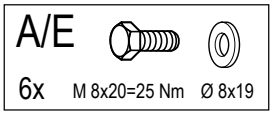

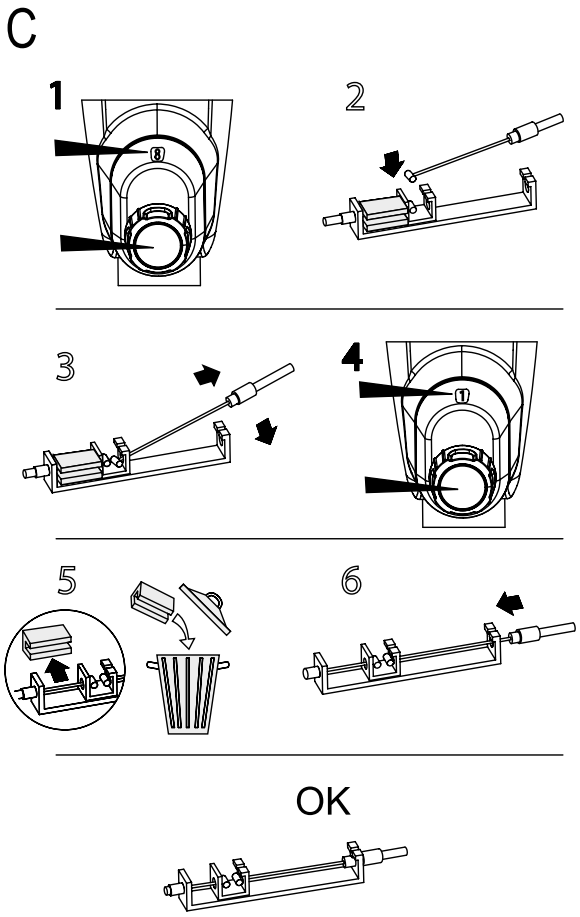

Step 11: Attaching the Rails

1. Attach the axle (D-14) inside the console mast (D).
2. Secure the right rail (E-L) to the axle (D-14) using one washer (Ø17x25), one washer (Ø8x25), one washer (Ø7x12.9), and one screw (M8x20).
3. Attach the right rail (E-L) to the right pedal (H-R) using two washers (Ø8x16), one nut (M8), and one screw (M8x65).
4. Repeat the process for the left rail (H-L).
5. Tighten the screws securely.

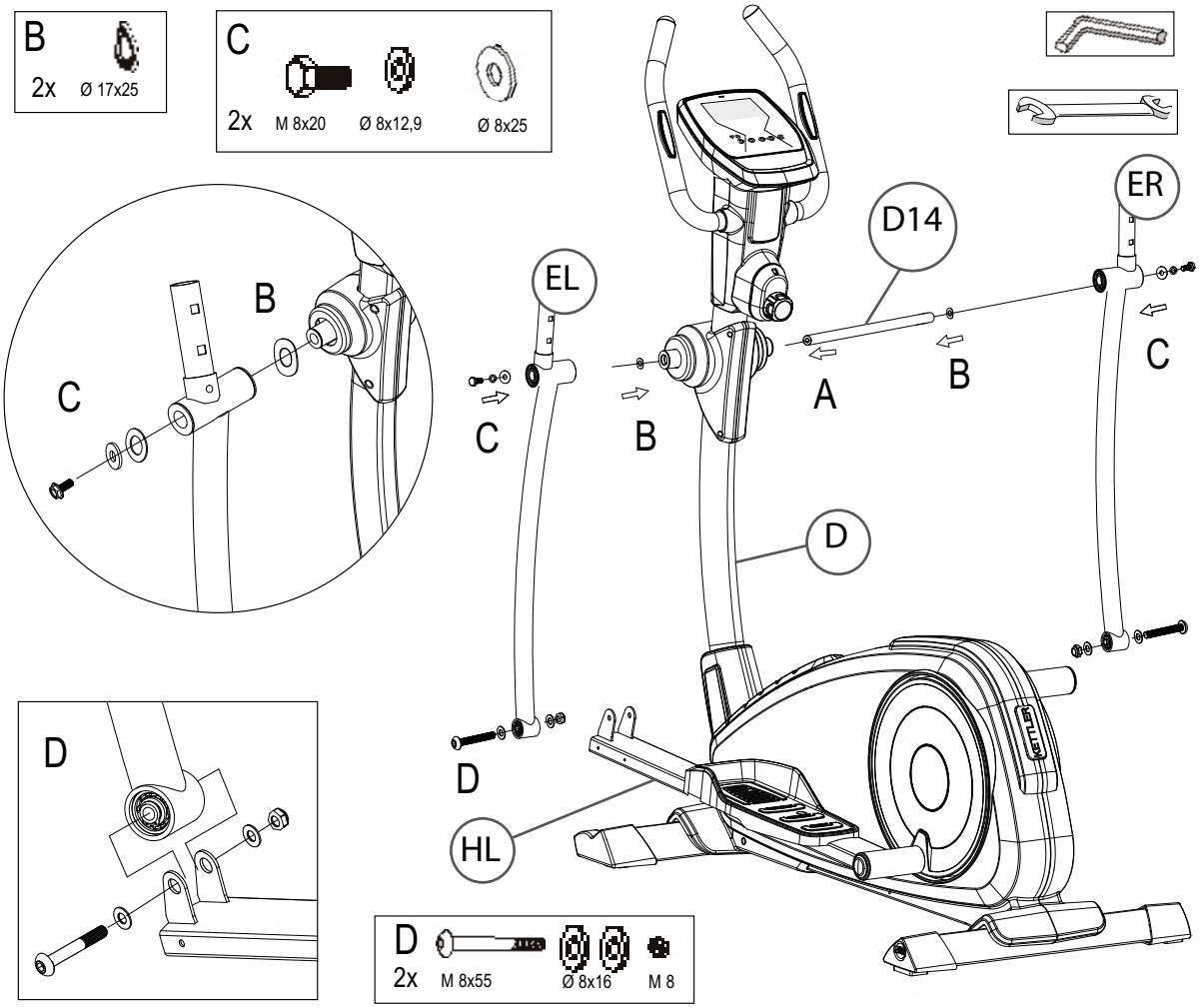

Step 12: Attaching the Rail Covers

1. Attach the left rail covers (E-1) to the left pedal (H-L) using four screws (M5x12) and one screw (3x20).
2. Repeat the step for the right cover (E-4).
3. Tighten the screws securely.

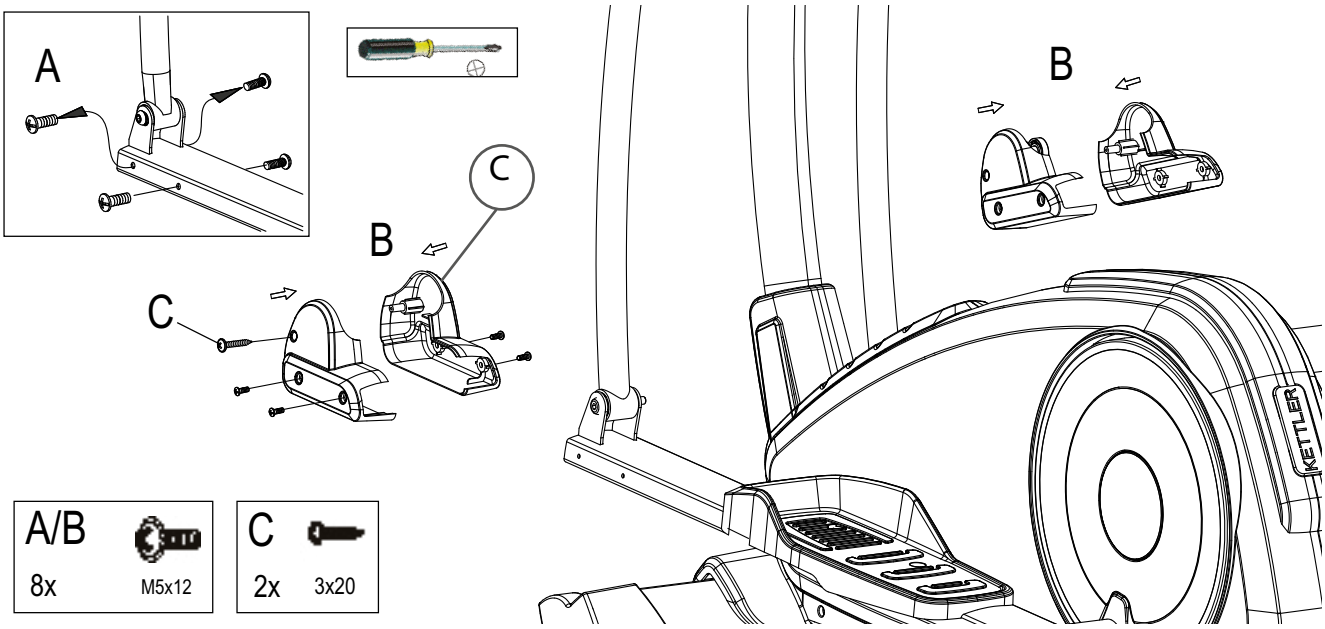

Step 13: Attaching the Handlebars

1. Attach the left handlebar (C-L) to the left rail (E-L) using two screws (M8x40), two washers (Ø8x19), and two nuts (M8).
2. Repeat the step for the right handlebar (C-R).
3. Tighten the screws securely.

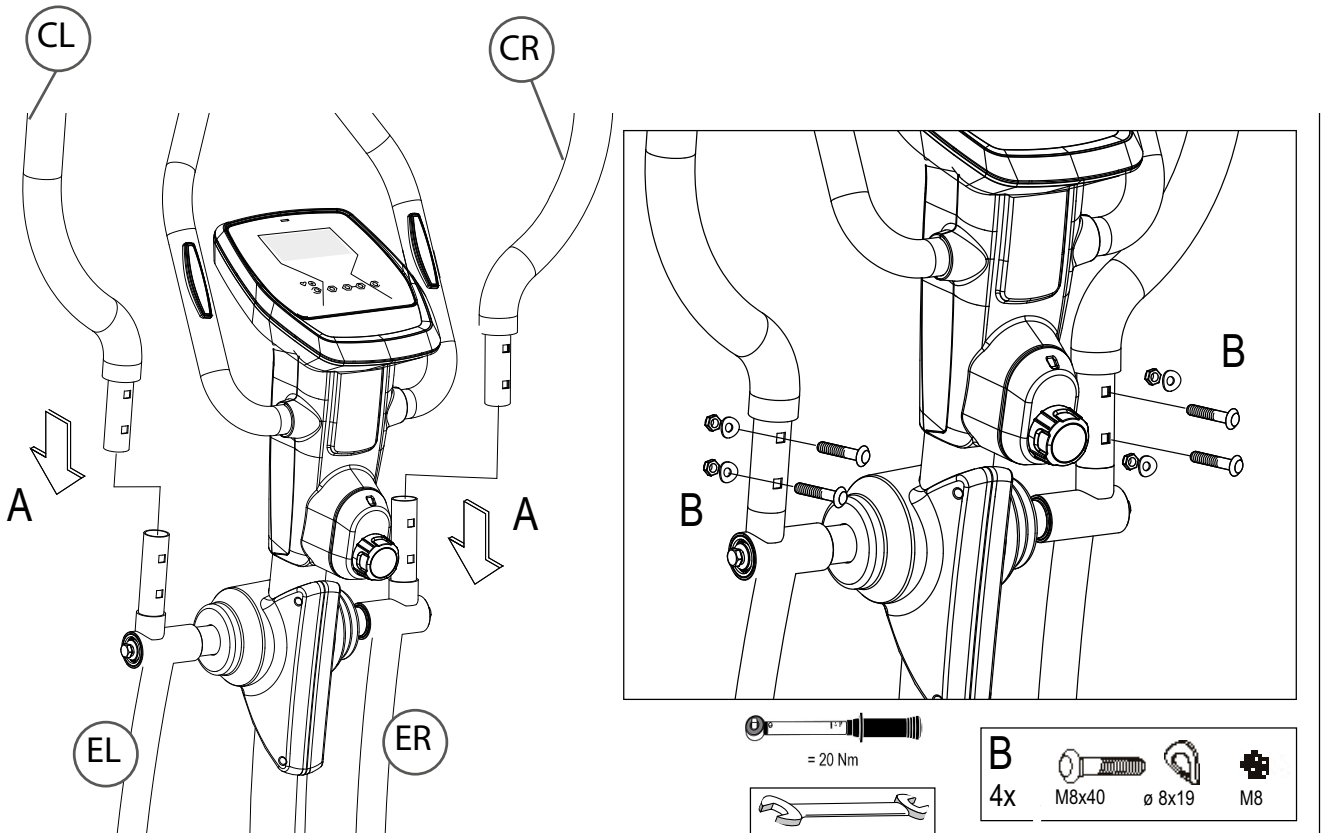

Step 14: Attaching the Handlebars Covers

1. Attach the left handlebar covers (C-1 & C-2) using five screws (3x20) and one screw (M5x12).
2. Repeat the step for the right handlebar covers (C-3 & C-4).
3. Tighten the screws securely.

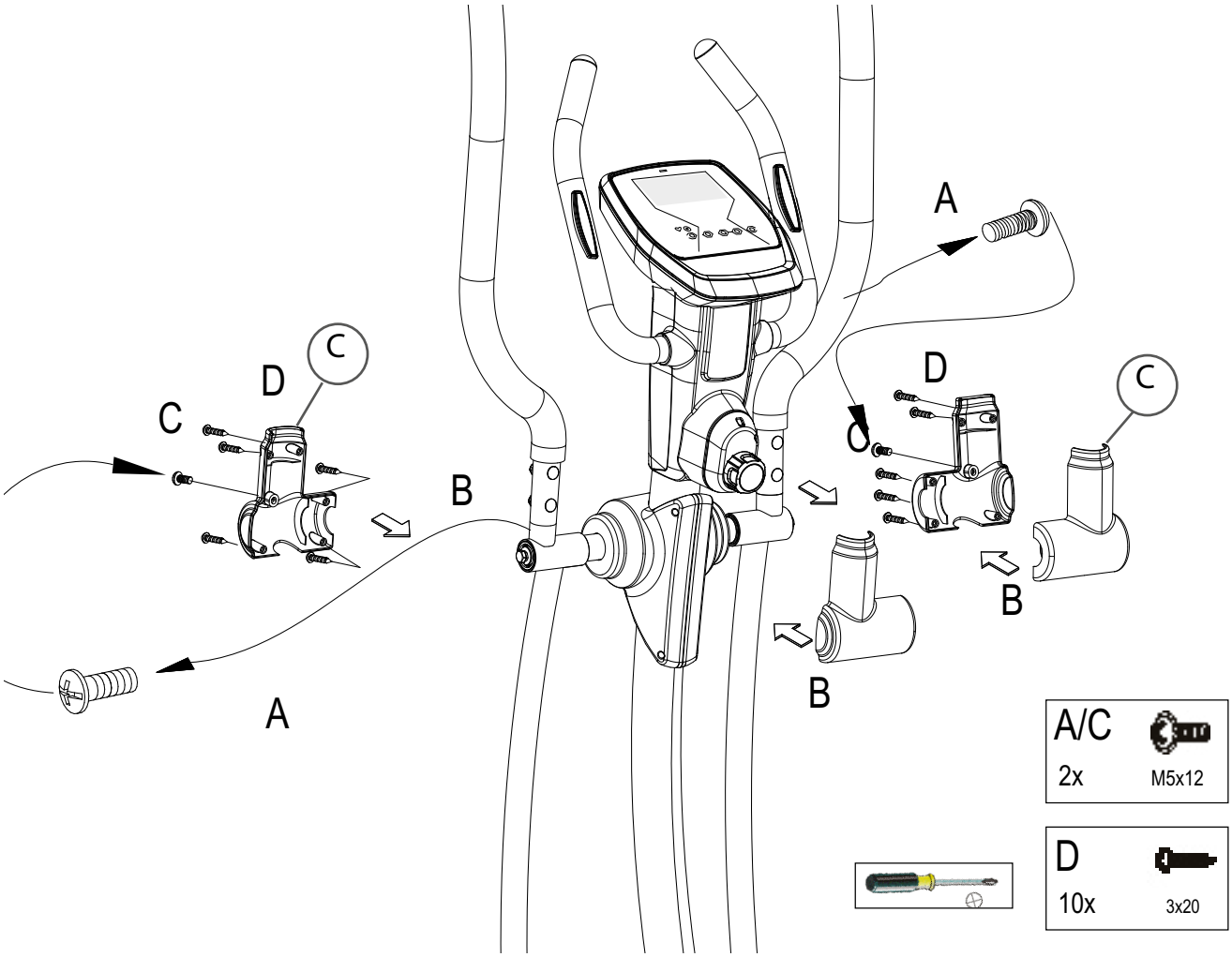

Step 15: Connecting the Device to the Power Supply

⚠ **CAUTION**

+ The device must not be connected to a power strip, as it cannot be guaranteed that the device will receive adequate power. Technical errors may occur as a result.
+ Plug the power cord into a socket that meets the electrical safety requirements outlined in the electrical safety chapter.

Correct Mounting and Dismounting

1. To mount the device, grip the handlebars with both hands and step onto the left pedal with your left foot or onto the right pedal with your right foot, then place the other foot onto the corresponding pedal.
2. To dismount, grip the handlebars with both hands and place one foot beside the device, then the other foot.

ⓘ **NOTICE**

+ Familiarise yourself with all the functions and setting options of the device before starting training. Have the proper use of this product explained to you by a specialist.
+ Always start your training with low intensity and increase evenly and gently. End your training with a cool-down phase. If you are unsure, please consult your physician.

3.1 Console display

Button	Function
Recovery	Start the recovery pulse function. Based on the recovery pulse, you will receive a fitness score.
Reset	+ Press: Delete the displayed value. + Press and hold: Deletes all values and restarts the console.
+/-	+ Press: Modify the input values. + Press and hold: Cycle through all values.

Mode	Press: Switches to the next input value. The current value is confirmed. Press during training: + Toggles the display change on or off. + Switches to the next display section. **Press and hold MODE + press RESET:** Clears the display and restarts the console. **MODE + RESET:** Switch between the Kjoule and Kcal display. Clears the display.
Heart Rate Measurement	Heart rate measurement can be performed using three sources: ⚠ **WARNING** Your training equipment is not a medical device. The heart rate measurement of this equipment may be inaccurate. Various factors can affect the accuracy of the heart rate measurement. The heart rate measurement serves only as a training aid. + Ear clip (Not included) + Hand pulse sensors + Chest strap with plug-in receiver (Not included)

3.2 Display

Display	Function
ODO	Display: 0-9999km
TIME	Display area depending on the training mode: + 0:00-99:59 h + 99:00-0:00 h
RPM	Display area: 14-199 RPM
KM/H	Display area: 5.0-99.9 km/h

DISTANCE	Display area depending on the training mode: + 0.00-999.9 km + 999.5-0.00 km
KJOULE/KCAL	Display area depending on the training mode: + 0-99:59 + 9990-0
PULSE	Display: 40-220 BPM

3.3 Quickstart

How to Start a Workout Without Preset Values:

1. Press any button.

1.1. Or start pedaling.

The display shows STOP, and TIME starts blinking to enter a workout duration.

ⓘ **NOTE**

+ A heart rate value is displayed when a pulse signal is detected via ear clip, hand pulse sensors, or plug-in receiver.
+ Display sections switch automatically every 6 seconds.

The workout time and other values are displayed in ascending order.

The automatic display change is active and indicated by SCAN.

3.4 User defined Programs

Time, distance, and energy can be set as target values. These values will count down when the workout starts.

Additionally, a heart rate limit can be set. If exceeded, the display will blink.

Setting a Time Target (TIME):

1. Press the button until TIME blinks.
2. Use Plus or Minus to set the desired time.
3. Confirm with MODE.

Setting a Distance Target (DISTANCE):

4. Press the button until DISTANCE blinks.
5. Use Plus or Minus to set the desired distance.
6. Confirm with MODE.

Setting an Energy Target (Kjoule/Kcal):

7. Press the button until CAL blinks.
8. Use Plus or Minus to set the desired Kcal or Kjoule.
9. Confirm with MODE.

Activating Heart Rate Monitoring:

10. Display: Enter Age

11. Use Plus or Minus to set the desired heart rate limit (e.g., 130).
12. Confirm with MODE (target mode exits).

After completing the input, the display indicates workout readiness with the time target.

→ ***When a value reaches zero, the display blinks, and a signal tone sounds. The display then starts counting upwards again.***

3.5 Pausing or Ending a Workout

If the pedaling rate drops below 15 revolutions per minute, the system detects a workout interruption.

The display shows STOP SCAN.

Workout data is alternately displayed.

1. Press MODE to start or stop the automatic display change.

The workout data remains visible for 4 minutes.

→ ***If no button is pressed or no activity occurs, the device switches to standby mode with a clock display after 4 minutes.***

Resuming the Workout

ⓘ **NOTE**
If the workout is resumed within 4 minutes, the last recorded values will continue counting up or down.

3.6 RECOVERY – Recovery Pulse Phase

The RECOVERY function allows a recovery pulse measurement after each workout.

1. Press the Recovery button after completing your workout.
2. Place your hands on the hand pulse sensors.

A 60-second countdown begins.

The current pulse value blinks in the PULSE display.

3. On the right side of the display, a fitness score between F1 and F6 appears:

+ F1 = Best recovery ability
+ F6 = Weakest recovery ability

ⓘ **NOTE**
An improvement in this score with the same training routine indicates increased fitness.

4. Press RECOVERY to exit the recovery phase.

► **ERROR MESSAGE**
If no pulse is detected at the beginning or end of the measurement, the message "Err" appears.

4.1 General Instructions

When training, it is important to perform the exercises correctly in order to avoid injuries and achieve the desired training effect. Make sure you use the correct technique and train at an appropriate intensity level. Always consult an expert such as a trainer or doctor if you are unsure or have health problems. Always start your training with a low load and increase it evenly and gently.
End your training with a cool-down phase. If you have any questions or uncertainties, contact your doctor.

4.1.1 Training clothes

During training, wear appropriate sports clothing that is comfortable and breathable. Avoid clothing that restricts you or is uncomfortable. Make sure that your shoes are suitable and offer you sufficient support. In addition, always carry a towel with you to wipe away sweat and keep the equipment clean.

4.1.2 Warming up and stretching

It is important to warm up and stretch properly before training to avoid injury and improve performance. Stretching helps to loosen muscles and improve flexibility. Be sure to incorporate a short stretching routine before each workout.

Warm-up exercise:

1. Stand upright with your feet about shoulder-width apart.
2. Start with gentle arm circles by slowly moving your arms forwards in small circles in a controlled manner.
3. Perform arm circles backwards to loosen your shoulders and arms.
4. Do squats by slowly squatting down and then straightening up again. Make sure that your knees do not extend beyond your toes.

⚠ **CAUTION**
Do not exercise with sore muscles or take it easy on the affected muscles, as this can lead to injuries.

4.1.3 Medication

If you regularly take medication and want to exercise, it is important to be aware of possible side effects. Ask your doctor whether your medication affects your workout.

4.1.4 Used muscle groups

This training uses the following muscle groups:

+ Gluteal muscle
+ Leg muscles

Make sure you keep your back straight during training. Do not hunch over and do not arch your back. Do not fully extend your legs, but keep a slight bend in the backwards movement.

4.1.5 Exercise frequency

Regular exercise is crucial to making progress and staying healthy in the long term. Continuous exercise can strengthen muscles, improve endurance and enhance overall well-being. Remember that even small workouts can be done regularly to achieve long-term results.

Training with heart rate orientation

Heart rate orientation guarantees an extremely effective and healthy training. Through your age and the following table, you can quickly and easily read and determine the optimal pulse for your training. An acoustic alarm will sound if your heart rate exceeds the set target heart rate. Which target heart rate is important for which training goal can be found out in the following.

Fat burning (weight management): The main goal here is to burn deposits of fat. In order to achieve this training goal, a low training intensity (approximately 55% of the maximum heart rate) and a longer training period are required.

Cardiovascular training (cardio training): The primary goal is to increase stamina and fitness through an improved provision of oxygen through the cardiovascular system. In order to achieve this training goal, medium intensity (approximately 75% of the maximum heart rate) with a medium training period is required.

Anaerobic (maximum) load training: The main goal of maximum load training is to improve recovery after short, intense loads in order to be able to quickly return to the aerobic zone. In order to achieve this training goal, a high intensity (approximately 90% of the maximum heart rate) with short, intense load is required, which is followed by a recovery phase in order to prevent muscle fatigue.

Example:
For a 45-year-old man or woman, the maximum heart rate is 175 (220 - 45 = 175).

+ The fat burning target zone (55%) is at approximately 96 beats/min. = (220 - age) x 0.55.
+ The cardio target zone (75%) is at approximately 131 beats/min. = (220 - age) x 0.75.
+ The maximum heart rate for an anaerobic load training (90%) is at approximately 157 beats/min. = (220 - age) x 0.9.

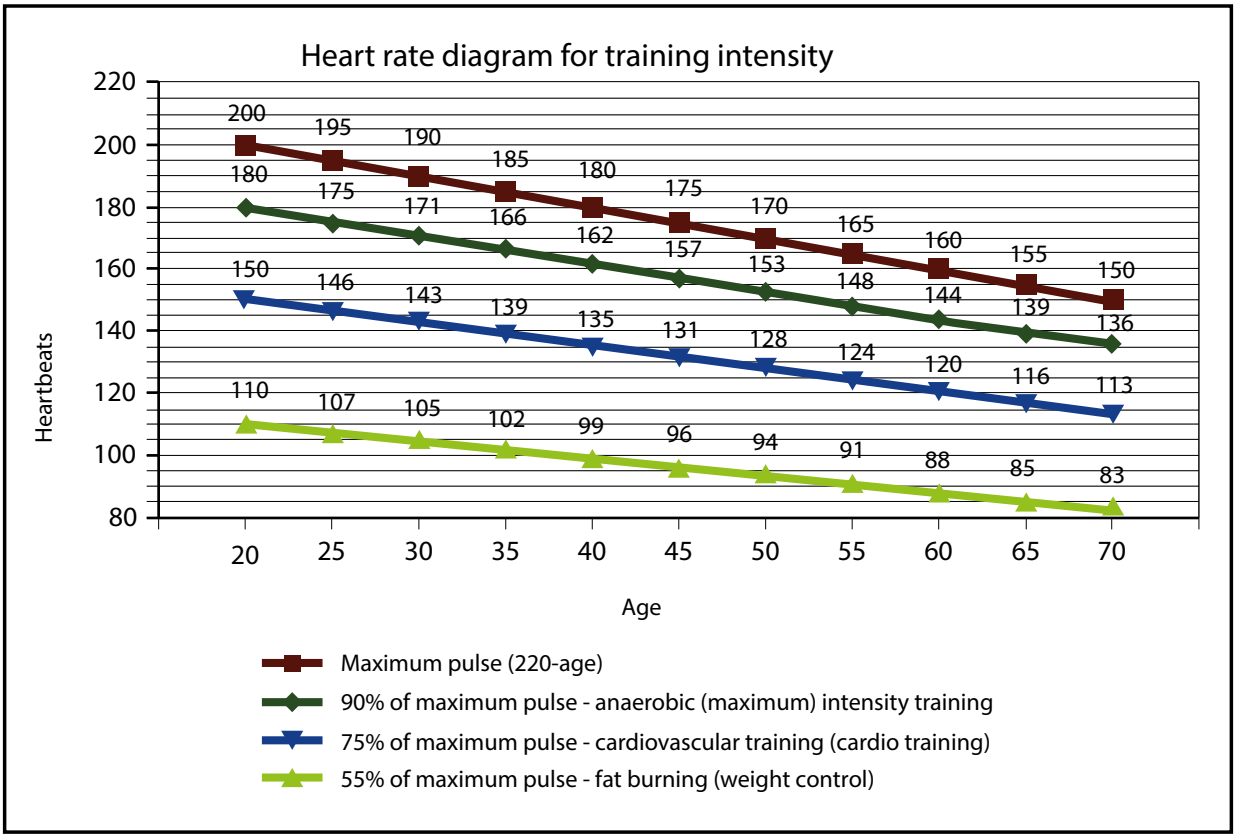

4.2 Workout journal

(Copy template)

				kg				

Date | Distance | Time (min.) | Resistance level | Training weight | Ø Pulse | Calories burnt | I feel ... | Body weight

4.3 Wireless Connection and Fitness Apps

This console is equipped with a wireless interface. Please take note that your mobile device needs to be compatible with the wireless interface of the treadmill.

To use training apps you will have to activate the wireless connection function on your mobile device (tablet or smart phone) and start the fitness app. Select your fitness equipment. Please follow the instructions given in the app. You will find the name of your fitness euqipment on a small sticker on the back of the console.

You will find the fitness apps in the app stores of Google or Apple. There you will find the apps "Kinomap" or "Zwift". Please note that these apps are produced by an external manufacturer. Fitshop does not take any responsibility regarding the availability, functionality or contents of these programmes.

IMPORTANT NOTE

The pre-installed apps are produced and provided by external manufacturers. Changes and availability within these apps might occur. Fitshop does not take any responsibility and can not be held liable for the availability, functionality or contents of these apps. To make sure the pre-installed apps are working correctly, they must be updated regularly. If needed, the respective app will notify you to do so. To update the app, you need a google account. A google email is sufficient. Just follow the instructions on the screen to perform the update.
Please note: The system is set up only for the pre-installed apps. Do not install any additional apps as their proper functionality can not be guaranteed. The installation of other apps might cause technical issues.

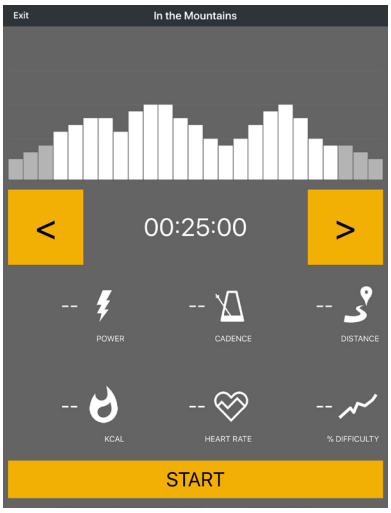

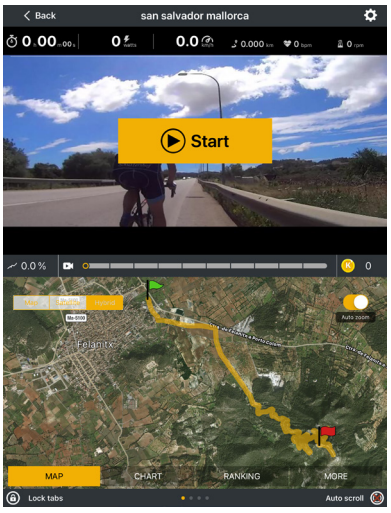

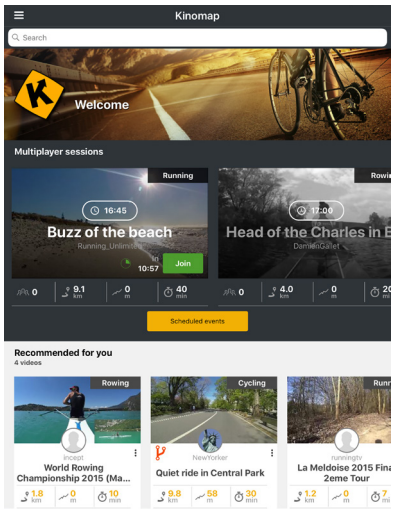

Example: Kinomap

5 STORAGE AND TRANSPORT

5.1 General Instructions

⚠ **WARNING**

+ The storage location should be chosen so that improper use by third parties or children can be prevented.
+ If your equipment does not have transportation wheels, the equipment must be disassembled before transportation.

► **ATTENTION**

+ Make sure that the equipment is protected from moisture, dust and dirt in the selected storage location. The storage location should be dry and well ventilated and have a constant ambient temperature between 10°C and 35°C.

5.2 Transportation Wheels

► **ATTENTION**

If you want to transport your equipment over particularly sensitive and soft floor coverings, such as parquet, planks or laminate, lay out the transport route with cardboard or similar to avoid possible floor damage.

1. Stand behind the equipment and lift it until the weight is transferred to the transportation wheels. After that, you easily can move the equipment to a new position. For long transport distances the equipment should be disassembled and safely packed.
2. Select the new location by following the instructions in the section 1.4 of this manual.

6 TROUBLESHOOTING, CARE AND MAINTENANCE

6.1 General Instructions

⚠ **WARNING**

+ Do not make any improper changes to the equipment.

⚠ **CAUTION**

+ Damaged or worn components may affect your safety and the life of the equipment. Therefore, immediately replace damaged or worn components. In such a case, contact the contract partner. The equipment must not be used until it has been repaired. If necessary, use only original spare parts.

► **ATTENTION**

+ In addition to the instructions and recommendations for maintenance and care given here, additional service and/or repair work may be necessary; this must only be carried out by authorised service technicians.

6.2 Faults and Fault Diagnosis

The equipment undergoes regular quality controls during production. Nevertheless, faults or malfunctions may occur. Frequently, individual parts are responsible for these disturbances, an exchange is usually sufficient. Please refer to the following overview for the most common errors and how to correct them. If the equipment still does not function properly, contact your contract partner.

Fault	Cause	Solution
Drive disks wobble/ make noises	Drive disk loose	Tighten nut (pay attention to left-hand / right-hand thread)
Display is blank/is not working	Loose cable connections	Check cable connections
Equipment wobbles	Equipment is not level	Align the feet
Creaking noises on the stepping area	Loose screws on stepping area	Tighten the screws on the stepping area
Creaking noises	Screw connections loosened or too tight	Check screw connections
Squeaking noises on the guide rails	Guide rails or rollers dirty or guide rails dry	Clean the guide rails and then lubricate them with a suitable lubricant
No pulse display	+ Sources of interference in the room + unsuitable chest strap + Wrong position of chest strap + Chest strap defective or battery empty + Pulse display defective	+ Eliminate sources of interference (e.g. mobile phone, WLAN, lawn mower and vacuum cleaner robot, etc. ...) + Use a suitable chest strap (see RECOMMENDED ACCESSORIES). + Reposition chest strap and/or moisten electrodes + Changing batteries + Check if pulse display by hand pulse possible

6.3 Error Codes and Troubleshooting

The electronics of the equipment continuously carries out tests. In case of deviations, an error code appears on the display and normal operation is stopped for your safety.

Please contact the contract partner for technical support.

6.4 Maintenance and Inspection Calendar

To avoid damage from sweat, the equipment must be cleaned with a damp towel (no solvents!) after each training session.

The following routine tasks must be performed at the specified intervals:

Part	Weekly	Monthly	Quarterly
Display console	C	I	
Slide rails*		C	
Lubrication of slide rails and moving parts*			I
Plastic covers	C	I	
Screws and cable connections		I	
Legend: C = clean; I = inspect			

*Make sure to always clean the slide rails and moving parts before re-lubricating.

By scanning the QR-code with the camera function or QR-code scanner app of your smartphone/tablet, a video on general maintenance of a crosstrainer opens on YouTube. The video serves to illustrate the maintenance points described in this manual.

Please note that the video may not be available in your language or with appropriate subtitles.

If you cannot scan QR-codes, you can access all Fitshop videos on YouTube by first opening YouTube and entering "Fitshop" in the search field.

7 DISPOSAL

At the end of its operational life, this equipment cannot be disposed of in normal household waste. Instead, it must be disposed of via an electricals recycling centre. Further information can be obtained from your local authority's recycling service.

The materials can be recycled as per their symbols. Through the reuse, recycling of materials or other forms of recovery of old equipment, you make an important contribution to the protection of the environment.

8 RECOMMENDED ACCESSORIES

To make your training experience even more efficient and pleasant, we recommend that you add suiting accessories to your fitness equipment. For elliptical cross trainers this could for example be a **floor mat**, which makes your fitness equipment stand more securely and also protects the floor from sweat or **silicone spray** to keep moving parts in good shape.

If you have purchased a fitness machine with pulse training and want to train your heart rate, we strongly recommend that you use a compatible **chest strap**, as this ensures optimum transmission of the heart rate.

Our range of accessories offers the highest quality and makes training even better. If you would like to find out more about compatible accessories, please go to the detail page of the product in our webshop (the easiest way is to enter the article number in the search field above) and go to the recommended accessories on this page. Alternatively, you can use the QR-code provided. Of course, you can also contact our customer service: by telephone, e-mail, in one of our branches or via our social media channels. We will be happy to advise you!

chest strap

floor mat

silicone spray

chest strap contact gel

9.1 Serial Number and Model Name

In order to provide you with the best possible service, please have the model name, article number, serial number, exploded drawing and parts list ready. The corresponding contact options can be found in chapter 11 of this operating manual.

ⓘ **NOTICE**
The serial number of your equipment is unique. It's located on a white sticker. The exact position of this sticker is shown in the following illustration.

Enter the serial number in the appropriate field.

Serial number:

Brand / Category:

Kettler / Elliptical cross trainer

Model Name:

Nova M

Article Number:

K-CT1019-100

9.2 Parts List

No.	Name
A	Computer LT6887
A-1	Cross-cone head screw
A-2	Big cover for computer (upper+lower)
B	Handlebar set
B-1	front handlebar
B-2	Pulse wire, middle section
B-3	Pulse sensor
	Pulse wire, lower section
B-4	Foam grip
B-5	End cap
C-1	cover for upper handlebar (right-front)
C-2	cover for upper handlebar (right-rear)
C-3	cover for upper handlebar (left-front)
C-4	cover for upper handlebar (left-rear)
C-5	End cap
C-L	upper handlebar(left)
C-L-F	foam grip(black)
C-R	upper handlebar(right)
C-R-F	foam grip(black)
D	Computer mast
D-1	Cap for handlebar post(front)
D-10	Screw
D-11	Screw
D-12	Screw
D-13	Mainframe
D-14	Axle for handlebar
D-15	Disc
D-16	Cap for logo
D-17	Chain cover, right
D-19	Chain cover, left
D-2	Cap for handlebar post(rear)
D-20	Screw

No.	Name
D-21	flat washer
D-22	Cross bar
D-23	C clip
D-24	wave washer
D-25	flat washer
D-26	Bearing 6004RS
D-27	Tension cable down
D-28	Screw
D-29	Shaft
D-3	bushing
D-30	Belt 450J8
D-31	Hex bolt
D-32	Big pulley
D-33	Connection shaft for cover
D-35	Cap for disc
D-5	Cap underneath computer, Rear
D-4	Tension Control
D-6	Boot
D-7	cable upper
D-8	cable lower / sensor box
D-9	Semi-circle washer
E-1	Front cap for pedal arm(left)
E-2	bearing 6001ZZ
E-3	bushing
E-4	Front cap for pedal arm(right)
E-5	Bearing 6003ZZ
E-L	Lower handlebar(right)
E-R	Lower handlebar(left)
F-1	End cap of front stablizer(left)
F-2	Front stabilizer
F-3	End cap of front stablizer(right)
F-4	Screw

G-1	End cap of rear stablizer left
G-2	Rear stabilizer
G-3	End cap of rear stablizer right
H-1	pedal(left)
H-2	End cap for pedal arm
H-3	bushing
H-4	pedal(right)
H-5	wave washer
H-6	Screw
H-7	flat washer
H-8	spring washer
H-9	Bearing 2203RS
H-L	pedal arm(left)
H-R	pedal arm(right)
I	Idler bar set
I-1	Hex bolt
I-2	Bolt
I-3	Idler spring
I-4	idler
I-5	Screw
I-6	Nylon nut
I-7	bearing 6200ZZ
I-8	flat washer
J-1	Hex bolt
J-2	Magnetic set
J-3	Flat washer
K	Flywheel set
K-1	bushing
K-2	nut
K-3	Bearing 6300RS
K-4	flywheel
K-5	Pattern nut
K-6	axle for flywheel
K-7	Bearing 6000RS

Kit	Hardware kit
L-1	Hex screw
L-10	Wavy washer
L-11	Screw
L-12	flat washer
L-13	spring washer
L-14	knob for pedal
L-15	Screw
L-16	Flat washer
L-17	Nylon nut
L-18	Flat washer
L-19	C-type ring
L-2	Semi-circle washer
L-20	Screw
L-21	M8 Pull cap
L-22	Flat washer
L-3	Nylon nut
L-4	wave washer
L-5	Screw
L-6	Screw
L-7	flat washer
L-8	spring washer
L-9	Screw

9.3 Exploded Drawing

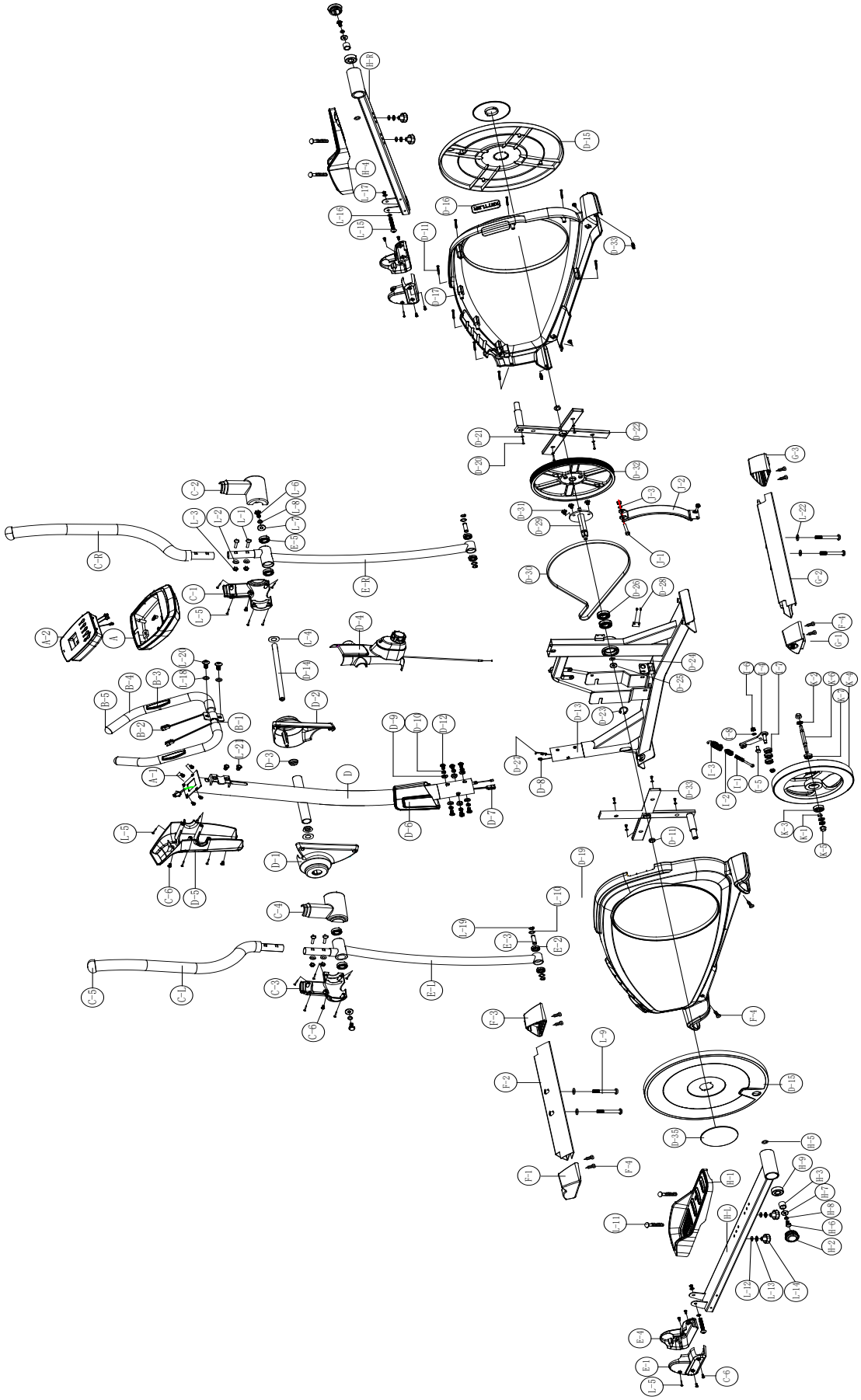

10 WARRANTY

Products from Kettler® are subject to strict quality control. However, if a fitness equipment purchased from us does not work perfectly, we take it very seriously and ask you to contact our customer service as indicated. We are happy to help you by phone via our service hotline.

Error Descriptions
Your fitness equipment is developed for long-term, high-quality training. However, should a problem arise, please first read the operating instructions. For further assistance, please contact your contract partner or call our service hotline. To ensure your problem is solved as quickly as possible, please describe the defect as exactly as possible.

In addition to the statutory warranty, we provide a warranty for every fitness equipment purchased from us according to the following provisions.

Your statutory rights are not affected.

Warrantee
The warrantee is the first/original buyer and/or any person who received a newly purchased product as a gift from the original buyer.

Warranty period
The warranty periods, shown on our web shop, begin on delivery of the fitness equipment. The respective warranty periods for your equipment can be found on its product website.

Repair Costs
According to our choice, there will either be a repair, a replacement of individual damaged parts or a complete replacement. Spare parts, that have to be mounted while assembling the equipment, have to be replaced by the warrantee personally and are not a part of repair. After the expiration of the warranty period, the responsibility for parts costs, repair costs, installation costs and delivery costs lies with the warranty holder.

The terms of use are defined as follows:

- Home use: solely for private use in private households up to 3 hours per day
- Semi-professional use: up to 6 hours per day (e. g. rehabilitation centres, hotels, clubs, company gyms)
- Professional use: more than 6 hours per day (e. g. commercial gyms)

Warranty Service
Within the warranty period, equipment which develops faults as a result of material or manufacturing defects, will be repaired or replaced at our discretion. Ownership of equipment or parts of equipment which have been replaced is transferred to us. The warranty period is not extended nor does a new warranty period begin following repair or replacement under the warranty.

Warranty Conditions
For the warranty to be valid, the following steps must be taken:

Please contact our customer service by email or phone. If the product under warranty has to be sent in for repair, the seller bears costs. After expiry of the warranty, the buyer bears the costs of transport and insurance. If the fault is covered by our warranty, you will receive a new or repaired equipment in return.

Warranty claims are invalid in case of damage resulting from:

+ misuse or improper handling
+ environmental influences (moisture, heat, electrical surge, dust, etc.)
+ failure to follow the current safety measures for the equipment
+ failure to follow the operating instructions
+ use of force (e. g. hitting, kicking, falling)
+ interventions which were not carried out by one of our authorized service centres
+ unauthorised repair attempts

Proof of Purchase and Serial Number
Please make sure that you are able to provide the appropriate receipt when claiming on your warranty. So that we can clearly identify the model of your equipment, and for the purposes of our quality control, you will need to give the serial number of your equipment, when contacting the service team. Where possible please have your serial number and your customer number ready when you call our service hotline. It will help us to deal with your request swiftly.

If you cannot find the serial number on your fitness equipment, our service team is at your disposal to offer further information.

Service outside of the Warranty Period
We are also happy to issue an individual cost estimate if there is a problem with your fitness equipment after the warranty has expired, or in cases which do not fall under the terms of the warranty, e. g. normal wear and tear. Please contact our customer service team to find a quick and cost-effective solution to your problem. In such a case you will be responsible for the delivery costs.

Communication
Many problems can be solved just by speaking to us as your specialist supplier. We know how important it is to you as a user of the fitness equipment to have problems solved quickly and simply, so you can enjoy working out with minimal interruption. For that reason, we also want to resolve your queries quickly and in a straightforward manner. Thus, please always keep your customer number and the serial number of the faulty equipment handy.

11 CONTACT

DE

TECHNIK

+49 4621 4210-900
+49 4621 4210-698
technik@fitshop.de
Öffnungszeiten entnehmen Sie unserer Homepage.

SERVICE

0800 20 20277 (kostenlos)
04621 4210 - 0
info@fitshop.de
Öffnungszeiten entnehmen Sie unserer Homepage: https://stg.fit/statita

DK

TEKNIK OG SERVICE

80 90 16 50
+49 4621 4210-945
info@fitshop.dk
Åbningstider kan findes på hjemmesiden: https://stg.fit/statit7

UK

CUSTOMER SUPPORT

00800 2020 2772
+494621 4210 944
info@fitshop.co.uk
You can find the opening hours on our homepage: https://stg.fit/statitc

FR

TECHNIQUE & SERVICE

+33 (0) 189 530984
+49 4621 42 10 933
info@fitshop.fr
Vous trouverez les heures d'ouverture sur notre site Internet: https://stg.fit/statit4

BE

TECHNIQUE & SERVICE

02 732 46 77
+49 4621 4210 933
info@fitshop.be
Vous trouverez les heures d'ouverture sur notre site Internet: https://stg.fit/statit8

ES

TECNOLOGÍA Y SERVICIOS

911 238 029
info@fitshop.es
Consulta nuestro horario de apertura en la página web: https://stg.fit/statit5

NL

TECHNISCHE DIENST & SERVICE

+31 172 619961
service@fitshop.nl
De openingstijden vindt u op onze homepage: https://stg.fit/statit3

INT

TECHNICAL SUPPORT & SERVICE

+49 4621 4210-944
service-int@fitshop.de
You can find the opening hours on our homepage: https://stg.fit/statita

PL

DZIAŁ TECHNICZNY I SERWIS

22 307 43 21
+49 4621 42 10-948
info@fitshop.pl
Godziny otwarcia można znaleźć na stronie głównej: https://stg.fit/statit6

AT

TECHNIK & SERVICE

0800 20 20277 (Freecall)
+49 4621 42 10-0
info@fitshop.at
Öffnungszeiten entnehmen Sie unserer Homepage: https://stg.fit/statitb

CH

TECHNIK & SERVICE

0800 202 027
+49 4621 42 10-0
info@fitshop.ch
Öffnungszeiten entnehmen Sie unserer Homepage: https://stg.fit/statit9

Please find a detailed overview including address and opening hours for all stores of the Fitshop Group in Germany and abroad on the following website:

www.fitshop.com/en/stores

WE LIVE FITNESS

WEBSHOP AND SOCIAL MEDIA

Fitshop is Europe's largest specialist store for home fitness equipment with currently over 70 stores and one of the world's most renowned online mail order companies for fitness equipment. Private customers order via the 25 web shops in the respective national language or have their desired equipment assembled on site. In addition, the company supplies fitness studios, hotels, sports clubs, companies and physio practices with professional equipment for endurance and strength training.

Fitshop offers a wide range of fitness equipment from renowned manufacturers, high-quality in-house developments and comprehensive services, such as a build-up service and sports scientific advice before and after the purchase. The company employs numerous sports scientists, fitness trainers and competitive athletes.

Visit us also on our social media platforms or our blog!

FIT SHOP
www.fitshop.co.uk
www.fitshop.de/blog

www.facebook.com/fitshopgroup

www.instagram.com/fitshopgroup/

www.youtube.com/@fitshop_uk

KETTLER

TAURUS

cardiostrong

BODYCRAFT

cardiojump

DUKEFITNESS

DARWIN

KETTLER

NOVA M