KETTLER

ASSEMBLY AND OPERATING INSTRUCTIONS

max. 160 kg

~ 60 Min.

101 kg

L 203 | W 87 | H 157

FSKTM2025100.01.03

Art. No.: K-TM2025-100

ALPHA RUN 800

Content

1	GENERAL INFORMATION	8
1.1	Technical Data	8
1.2	Technical Drawings	9
1.3	Personal Safety	10
1.4	Electrical Safety	11
1.5	Set-Up Place	12
2	ASSEMBLY	13
2.1	General Instructions	13
2.2	Scope of Delivery	14
2.3	Assembly	16
3	OPERATING INSTRUCTIONS	25
3.1	Display Overview	25
3.2	Start Display	26
3.3	Home Area	26
3.3.1	Home Selection	27
3.3.2	Menu Navigation Overview	27
3.4	Settings	28
3.4.1	System Settings	28
3.4.2	Settings: WI-FI and Updates	29
3.5	Training profiles	30
3.5.1	Training as a Guest	31
3.5.2	Training with a user profile	32
3.6	Training programmes	34
3.6.1	Quick Start	35
3.6.2	H.R.C Programme	36
3.6.3	Custom Programme	37
3.6.4	Goal Programme	39
3.6.5	Workout Programme	40
3.7	Training Display	42
3.8	Training Summary	43
3.9	Journal	44
3.9.1	Journal: Time period	45
3.10	Mirroring	47
3.11	USB-C Port	48
3.12	Key Configuration	49

4 WORKOUT TIPS 50

4.1 General Instructions 50
4.1.1 Training clothes 50
4.1.2 Warming up and stretching 50
4.1.3 Medication 51
4.1.4 Used muscle groups 51
4.1.5 Exercise frequency 51
4.2 Workout journal 53
4.3 Wireless Connection and Fitness Apps 54

5 STORAGE AND TRANSPORT 55

5.1 General Instructions 55
5.2 Transportation Wheels 55
5.3 Folding Mechanism 55
5.3.1 Folding Up the Treadmill 56
5.3.2 Unfolding the Treadmill 56

6 TROUBLESHOOTING, CARE AND MAINTENANCE 57

6.1 General Instructions 57
6.2 Faults and Fault Diagnosis 57
6.3 Error Codes and Troubleshooting 58
6.4 Care and Maintenance 59
6.4.1 Adjusting the Running Mat 59
6.4.2 Re-tensioning the Running Mat 60
6.4.3 Lubricating the Running Mat 60
6.5 Maintenance and Inspection Calendar 61

7 DISPOSAL 61

8 RECOMMENDED ACCESSORIES 62

9 ORDERING SPARE PARTS 63

9.1 Serial Number and Model Name 63
9.2 Parts List 64
9.3 Exploded Drawing 68

10 WARRANTY 70

11 CONTACT 72

Dear customer,
Thank you for choosing a Kettler fitness device. Kettler Sport represents tradition, durability, and quality like no other home fitness brand. Classic home trainers such as the Golf have accompanied users for decades. At the same time, Kettler stands for innovation and continuously develops thoughtful solutions, particularly in usability and training comfort.

Kettler Sport provides everything you need for successful training at home: cardio and strength equipment, as well as a wide range of fitness accessories.

Further information can be found at www.fitshop.com/kettler.

Intended Use

The equipment may only be used for its intended purpose.

The equipment is suitable for home use and semi-professional use (e.g. hospitals, clubs, hotels, schools, etc.). The equipment is not suitable for commercial or professional use (e.g. fitness studio).

Legal Notice

Fitshop GmbH
Europe's No. 1 for home fitness

International Headquarters
Flensburger Straße 55
24837 Schleswig
Germany

Management:
Christian Grau
Sebastian Campmann
Dr. Bernhard Schenkel

No. HRB 1000 SL
Local Court Flensburg
European VAT Number: DE813211547

Disclaimer

Since December 19, 2024, the trademark rights to © Kettler for fitness equipment in the EU, EFTA, and Turkey are held by Fitshop GmbH. All rights reserved. Any use of this trademark without the explicit written permission of Fitshop is prohibited.

Product and manual are subject to change. Technical data can be changed without advance notice.

FITSHOP

Europe's No.1 for Home Fitness

ABOUT THIS MANUAL

Please carefully read the entire manual before installation and first use. The manual will help you to quickly set up the system and explains how to safely use it. Make sure that all persons exercising with the equipment (especially children and persons with physical, sensory, mental or motor disabilities) are informed about this manual and its contents in advance. In case of doubt, responsible persons must supervise the use of the equipment.

Due to ongoing changes and software optimisations, the manual may have to be updated. If you notice any discrepancies during assembly or use, please refer to the manual uploaded to the webshop. The latest manual is always available there.

This equipment has been manufactured according to the latest safety knowledge. As far as possible, potential safety hazards which could cause injury have been eliminated. Make sure to carefully follow the instructions and that all parts are securely in place. If required, read through the instructions again to correct any mistakes.

Training devices must be classified according to accuracy and use. Accuracy classes are only applicable to devices that display training data.

Accuracy classes

Class A: high accuracy.
Class B: medium accuracy.
Class C: low accuracy.

The use classes explain the intended use of the training device.

Use classes

Class S (studio): professional and/or commercial use.
These training devices are intended for the use in training rooms of facilities such as sports clubs, school facilities, hotels, clubs and studios whose access and supervision is specifically regulated by the owner (person with legal responsibility).

Class H (home use): use at home.
These stationary training devices are intended for the use in private homes where access to the training device is regulated by the owner (person with legal responsibility).

Please pay close attention to the safety and maintenance instructions given here. The contract partner cannot be held liable for damage to health, accidents or damage to the equipment when it is not used in accordance with these instructions.

The following safety instructions may appear in this manual:

► **ATTENTION**
This notice indicates potentially hazardous situations which, if not avoided, may result in property damage.

⚠ **CAUTION**
This notice indicates potentially hazardous situations which, if not avoided, may result in slight or minor injuries!

⚠ **WARNING**
This notice indicates potentially hazardous situations which, if not avoided, may result in death or serious injuries!

⚠ **DANGER**
This notice indicates potentially hazardous situations which, if not avoided, will result in death or serious injuries!

ⓘ **NOTICE**
This notice indicates further useful information.

Retain these instructions in a safe place for future reference, maintenance or when ordering replacement parts.

1.1 Technical Data

Weight and dimensions	
Item weight (gross, including packaging)	120 kg
Item weight (net, without packaging)	101 kg
Packaging dimensions of cartons (L x W x H)	213 cm x 91 cm x 29 cm
Set-up dimensions (L x W x H)	202.3 cm x 87 cm x 156.9 cm
Folded dimensions (L x W x H)	135 cm x 87 cm x 168 cm
Running mat	
Thickness of the running mat	2.5 mm
Running Deck	18 mm
Running mat size in cm (L x W)	155 x 51
Maximum load	
Maximum user weight	160 kg
Technical specifications	
Power supply	Power plug
Console data	
Display	Pulse
	Speed
	Distance
	Calories
	Time
	Steps
	Pace
	Incline
Display size	15.6 inches
Display type	TFT
User profiles	4
Engine data	
Minimum speed	0.8 km/h
Maximum speed	22 km/h
Speed interval	0.1 km/h

Incline	0 - 15 Steps
Incline interval	1 Step
Motortype	Brushless motor
Programme overview	
Quick Start	1
Heart rate programmes	4
Custom programmes	4
Target programmes	3
Workout programmes	8
Other data	
Menu language	English, German
Wireless connection	Yes
Heart rate monitor	Hand pulse sensors, optional: chest strap
Use class	S

1.2 Technical Drawings

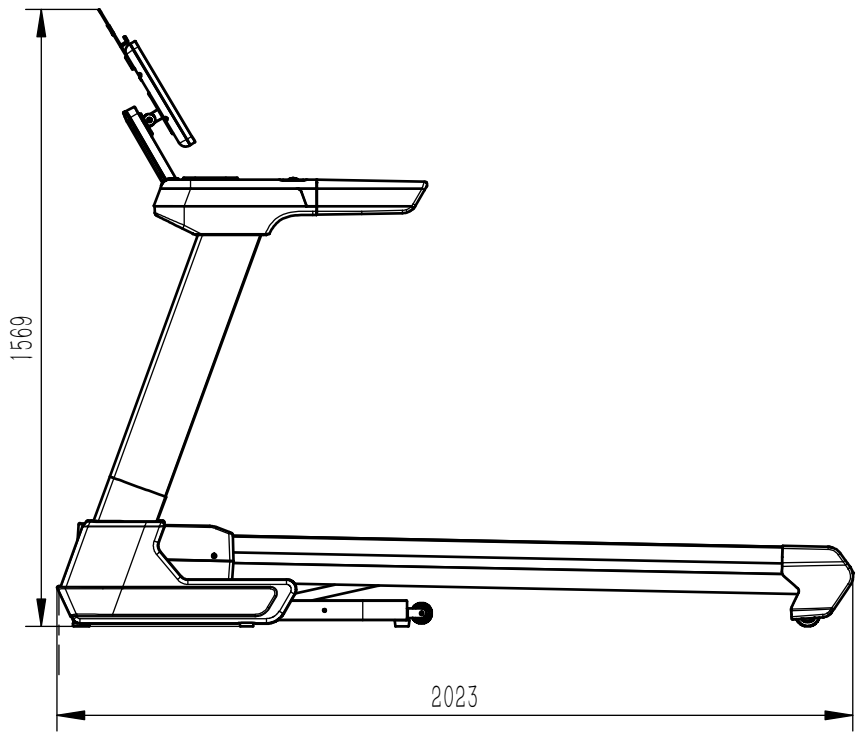

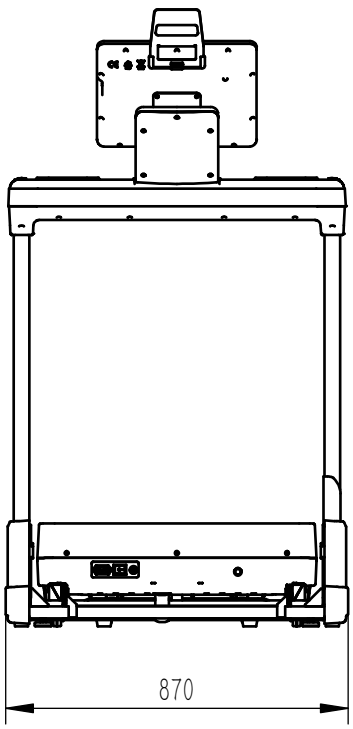

1.3 Personal Safety

⚠ **DANGER**

+ Before you start using the equipment, you should consult your physician that this type of exercise is suitable for you from a health perspective. Particularly affected are persons who: have a hereditary disposition to high blood pressure or heart disease, are over the age of 45, smoke, have high cholesterol values, are overweight and/or have not exercised regularly in the past year. If you are under medical treatment that affects your heart rate, medical advice is absolutely essential.
+ Note that excessive training can seriously endanger your health. Please also note that heart rate monitoring systems can be inaccurate. If you notice any signs of weakness, nausea, dizziness, pain, shortness of breath, or other abnormal symptoms, stop exercising immediately and seek advice from your doctor if necessary.
+ The owner must communicate all warnings and instructions to the user.

⚠ **WARNING**

+ This equipment may not be used by children under the age of 14.
+ Children should not be allowed unsupervised access to the equipment.
+ Persons with disabilities must have a medical license and must be under strict observation when using the equipment.
+ The equipment is strictly for use by one person at a time.
+ If your equipment provides a safety key, the clip of the safety key must be attached to your clothing before starting your training. In the event of a fall, the EMERGENCY STOP of the equipment can be initiated.
+ If an emergency occurs and training has to be stopped abruptly, pull out the safety key, grab both handles, jump onto the side rails and wait until the treadmill has come to a complete stop.
+ Keep your hands, feet and other body parts, hair, clothing, jewellery and other objects well clear of moving parts.
+ During use, wear suitable sports clothing rather than loose or baggy clothing. When wearing sports shoes, make sure they have suitable soles, preferably made of rubber or other non-slip materials. Shoes with heels, leather soles, studs or spikes are unsuitable. Never exercise barefoot.

⚠ **CAUTION**

+ If your equipment needs to be connected to the power supply with a mains cable, make sure that the cable is not a potential tripping hazard.
+ Make sure that nobody is within the range of motion of the equipment during training so as not to endanger you or other persons.
+ Be aware that if adjustment devices are left protruding, they may impede the user's movement.
+ The safety level of the appliance can only be maintained if it is regularly checked for damage and wear.

► **ATTENTION**

+ Do not insert any objects of any kind into the openings of the device.
+ To protect the equipment from use by unauthorised third parties, always remove the power cable (if existing) when not in use and store it in a safe place that is inaccessible to unauthorised persons (e.g. children).

1.4 Electrical Safety

⚠ **DANGER**

+ In order to reduce the risk of an electric shock, always unplug the equipment from the mains socket immediately after your workout, before assembly or dismantling, and before maintenance or cleaning. Do not pull on the cable.

⚠ **WARNING**

+ Do not leave the equipment unattended while the mains cable is plugged into the mains socket. During your absence, the mains cable must be removed from the mains socket to prevent improper use by third parties or children.
+ If the mains cable or plug is damaged or defective, contact your contract partner. Until repair, the equipment must not be used.

► **ATTENTION**

+ The equipment requires a mains connection of 220-230 V with 50 Hz mains voltage.
+ The equipment may only be connected directly to an earthed socket using the supplied mains cable. Extension cables must conform to VDE guidelines. Always completely unwind the mains cable.
+ The socket must be protected by a fuse with a minimum fuse rating of "16 A, slow blow".
+ Do not make any changes to the mains cable or the mains plug.
+ Keep the mains cable away from water, heat, oil and sharp edges. Do not route the mains cable underneath the equipment or under a carpet or rug, and do not place any objects on top of it.
+ If your purchased item is equipped with a TFT console, software updates must be carried out regularly. Follow the instructions on the console to perform the update(s).
+ The software systems on gym equipment with TFT consoles are set up only for the pre-installed apps. Do not install any additional apps.

ⓘ **NOTICE**

+ The pre-installed apps on TFT consoles are produced and provided by external manufacturers. Fitshop does not take any responsibility for the availability, functionality or contents of these apps.
+ Hereby, Fitshop GmbH declares that the radio equipment type Wireless Connection (2.402 – 2.480 GHz) complies with Directive 2014/53/EU. The full text of the EU Declaration of Conformity is available at the following website: www.fitshop.com.

1.5 Set-Up Place

⚠ **WARNING**

+ Do not place the equipment in main corridors or escape routes.

⚠ **CAUTION**

+ Make sure that there is a safety area behind the treadmill with a length of at least 2 m and a width at least equal to the width of the treadmill.
+ The training room should be well ventilated during training and not be exposed to any draughts.
+ Choose the place in which to set up the equipment such that there is enough free space/ clearance to the front, the rear and to the sides of the equipment.
+ The free area in the direction from which the exercise equipment is accessed must be at least 0.6 m larger than the exercise area.
+ The set-up and mounting surface of the equipment should be flat, loadable and solid.

► **ATTENTION**

+ The device may only be used in one building, in sufficiently tempered and dry rooms (ambient temperatures between 10°C and 35°C). The equipment should not be used outdoors or in rooms with high humidity (over 70%) like swimming pools.
+ A floor protective mat/equipment underlay can help to protect high-quality floor coverings (parquet, laminate, cork, carpets) from dents and sweat and can help to level out slight unevenness.
+ For Class S equipment, the exercise equipment may only be used in areas where access, supervision and control are specifically regulated by the owner.

Recommended free zone:

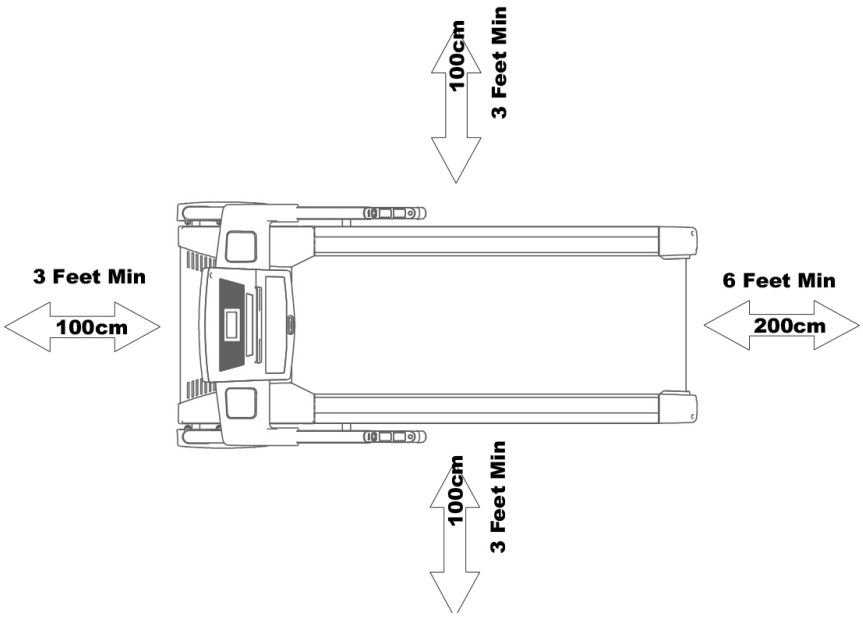

2.1 General Instructions

DANGER

+ Do not leave any tools, packaging materials such as foils or small parts lying around, as otherwise there is a danger of suffocation for children. Keep children away from the equipment during assembly.

WARNING

+ The treadmill is equipped with high-pressure shock absorbers that can cause the treadmill to suddenly open if handled incorrectly. To avoid possible personal injuries, never pull on the areas of the treadmill shown in the illustration. Never try to lift or move the treadmill at the marked areas.
+ Pay attention to the instructions attached to the equipment in order to reduce the risk of injuries.

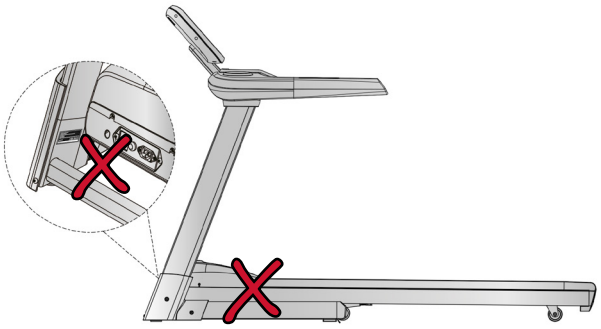

CAUTION

+ Ensure to have sufficient room for movement in each direction during assembly.
+ The assembly of the equipment must be carried out by at least two adults. If in doubt, seek the help of a third technically skilled person.

ATTENTION

+ To prevent damage to the equipment and the floor, assemble the equipment on a mat or packaging board.

NOTICE

+ In order to make the assembly as simple as possible, some screws and nuts to be used can already be pre-assembled.
+ Ideally, assemble the equipment at its later set-up place.

2.2 Scope of Delivery

⚠ **WARNING**
There is a transportation lock that prevents the treadmill from opening during transport. This transportation lock must be removed before assembly.

The scope of delivery consist of the following parts. At the beginning, check whether all parts and tools belonging to the device are included in the scope of delivery and whether damage has occurred. In the event of complaints, the contractual partner must be contacted directly.

⚠ **CAUTION**
If parts of the scope of delivery are missing or damaged, the assembly must not be carried out.

ⓘ **NOTICE**
Required tools: Spanner and Phillips screwdriver (B09), allen wrench (B10), allen wrench (B11)

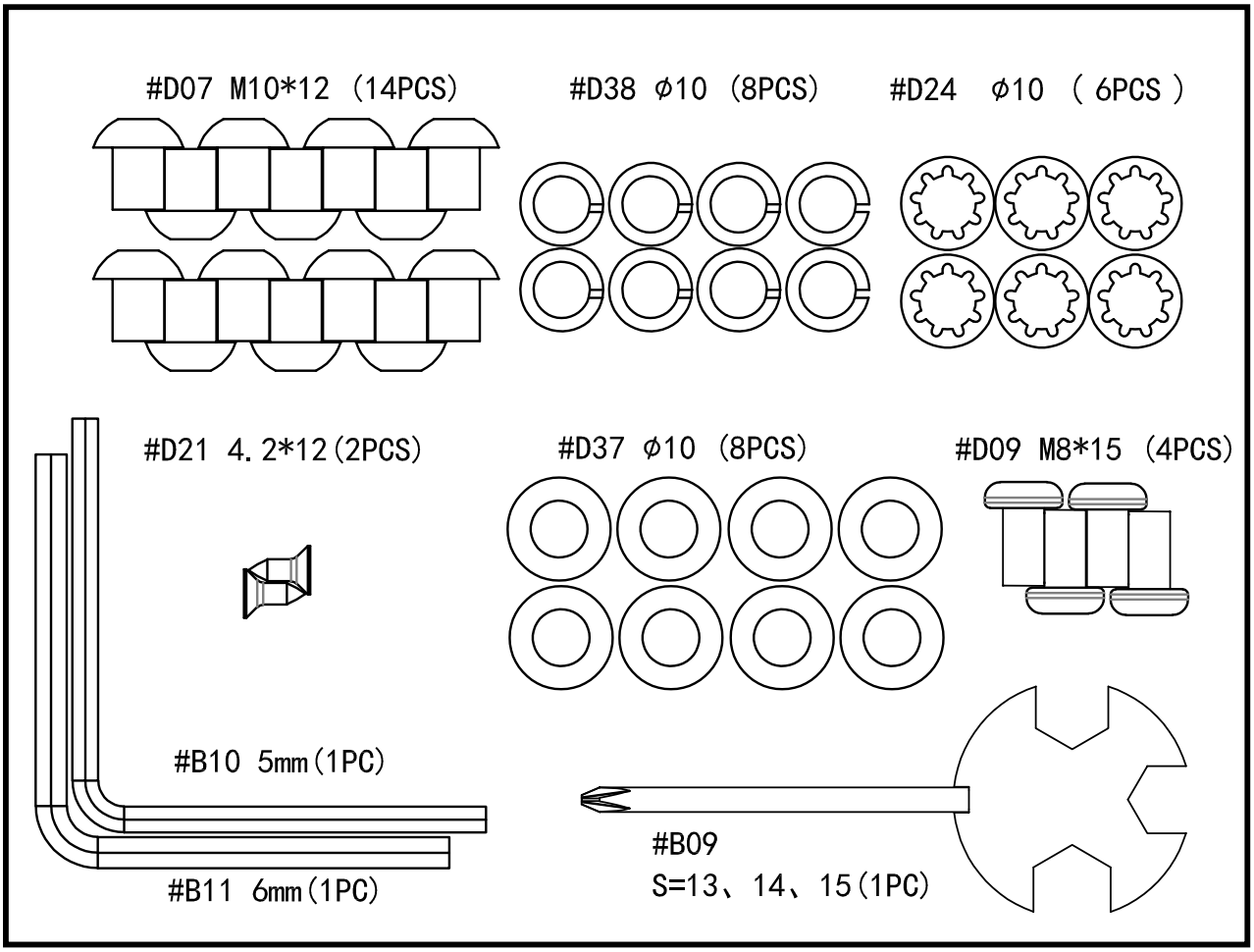

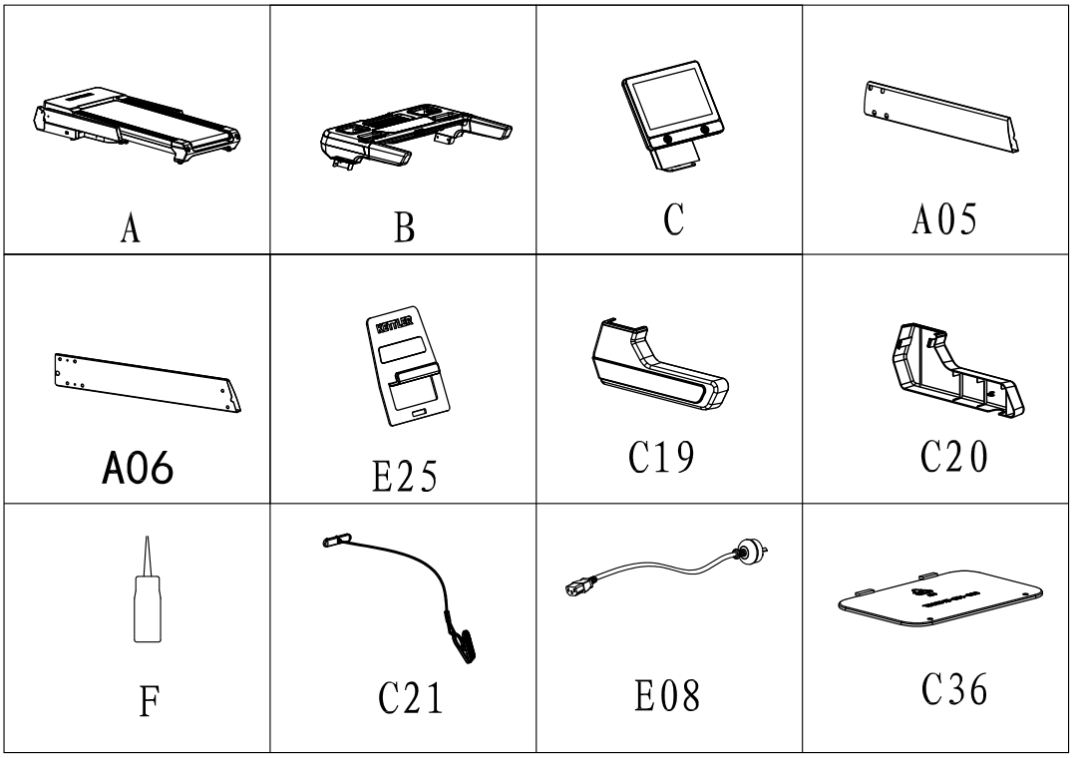

No.	Name	Qty.	No.	Name	Qty.
A	Main frame	1	C19	Left rear cover	1
B	Console base	1	C20	Right rear cover	1
C	Console assembly	1	F	Lubrication oil	1
A05	Left upright frame	1	C21	Safety key	1
A06	Right upright frame	1	E08	Power wire	1
E25	Tablet holder	1	C36	Console small cover	1

2.3 Assembly

Before assembly, take a close look at the individual assembly steps shown and carry out the assembly in the order given.

ⓘ **NOTICE**

- First loosely screw all parts together and check that they fit properly. Tighten the screws using the tool only when you are instructed to do so.
- Do not tighten the screws and bolts with excessive force as they could be damaged.
- If you have difficulty recognising the graphics, we recommend that you open and/or download the PDF instructions stored in the webshop on your end device (e.g. smartphone, tablet or PC). There you have the option of zooming in closer. Please note that the Adobe Acrobat Reader programme must be installed on your end device in order to open the file.

Step 1: Unpack the treadmill

1. Take the parts of the treadmill out of the packaging.

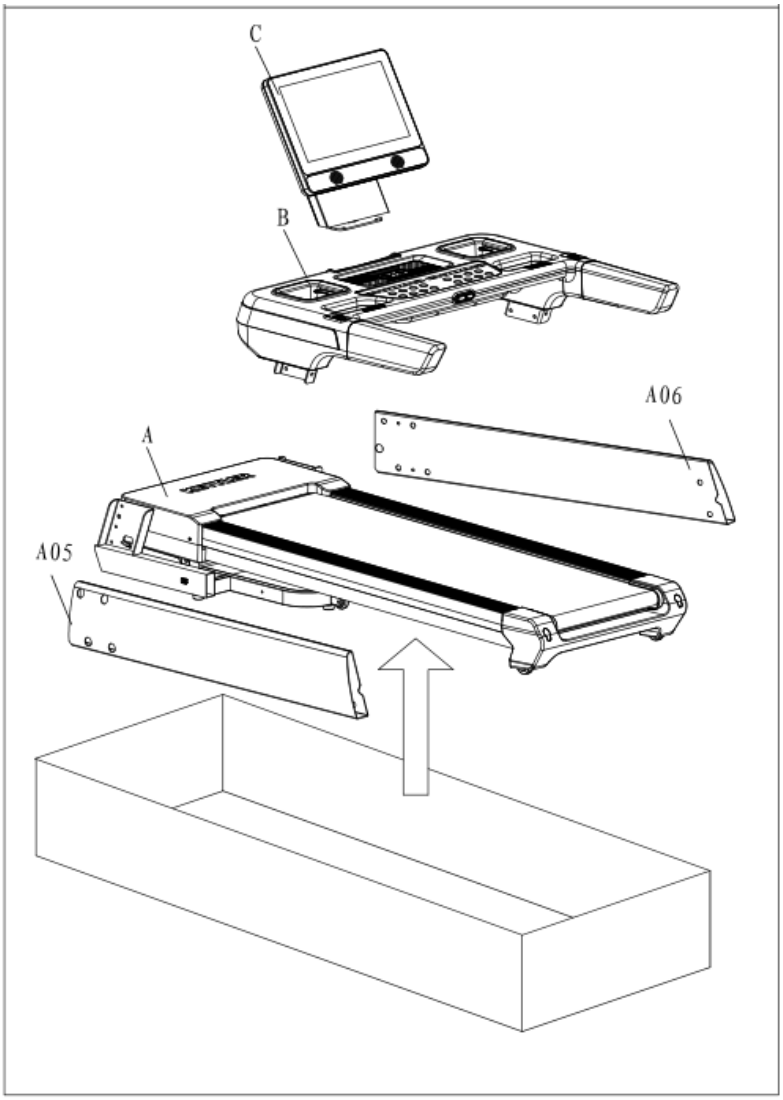

Step 2: Assembly of the upright tubes

Tools: Allen wrench (B11)

1. Fix the left upright tube (A05) to the base frame (A) with four bolts (D07), four spring washers (D38), and four washers (D37).
2. Fix the right upright tube (A06) to the base frame (A) with four bolts (D07), four spring washers (D38), and four washers (D37).

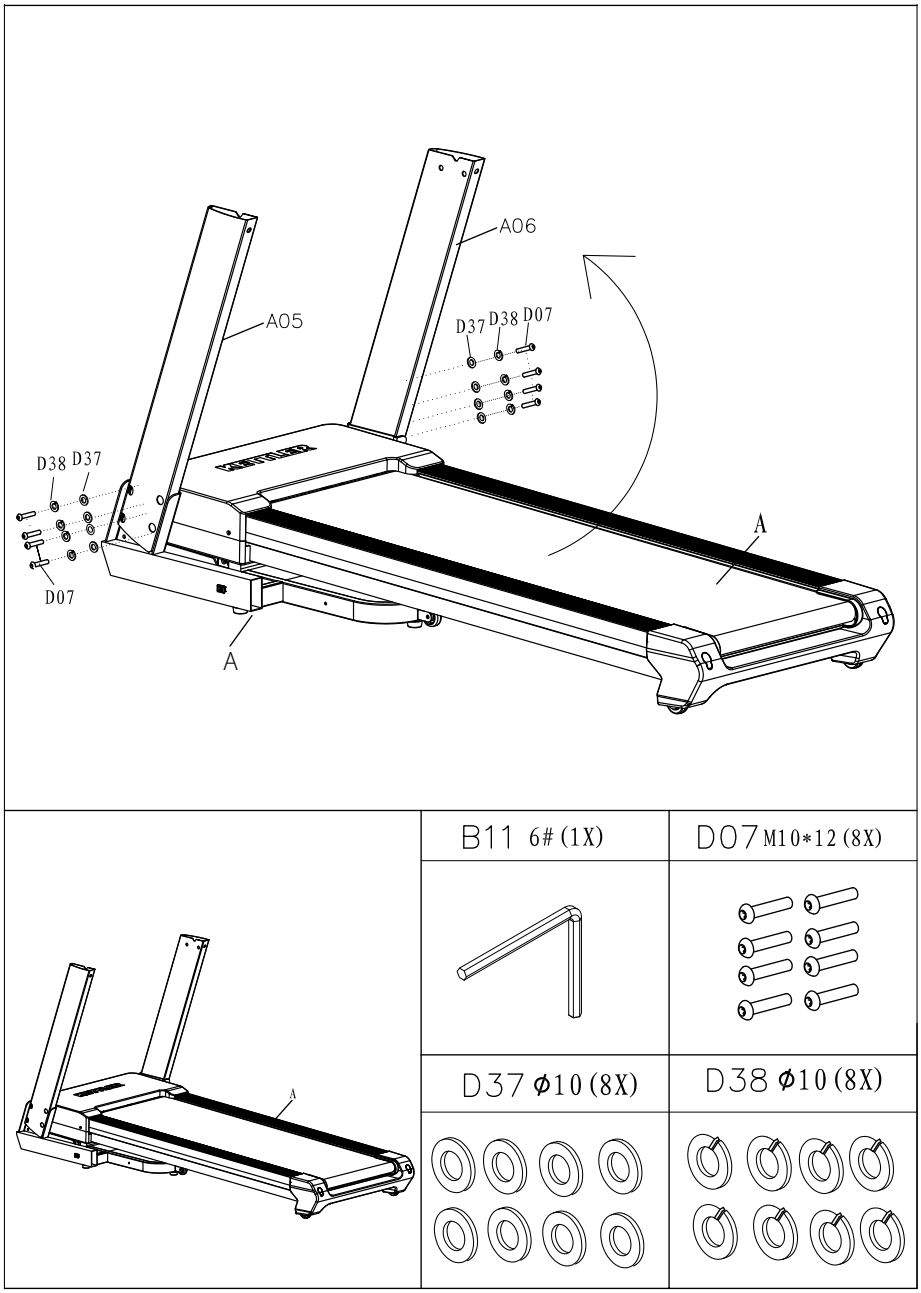

Step 3: Assembly of the console base

Tools: Allen wrench (B11)

► **ATTENTION**

+ In the following step, please pay attention that you don't pinch the cables.
+ Make sure that the cable are connected correctly.

1. Connect the console bottom signal wire (E20) with the console middle signal wire (E19).
2. Fix the console base (B) to the left (A05) and right (A06) upright tubes with six bolts (D07) and six locked washers (D24).

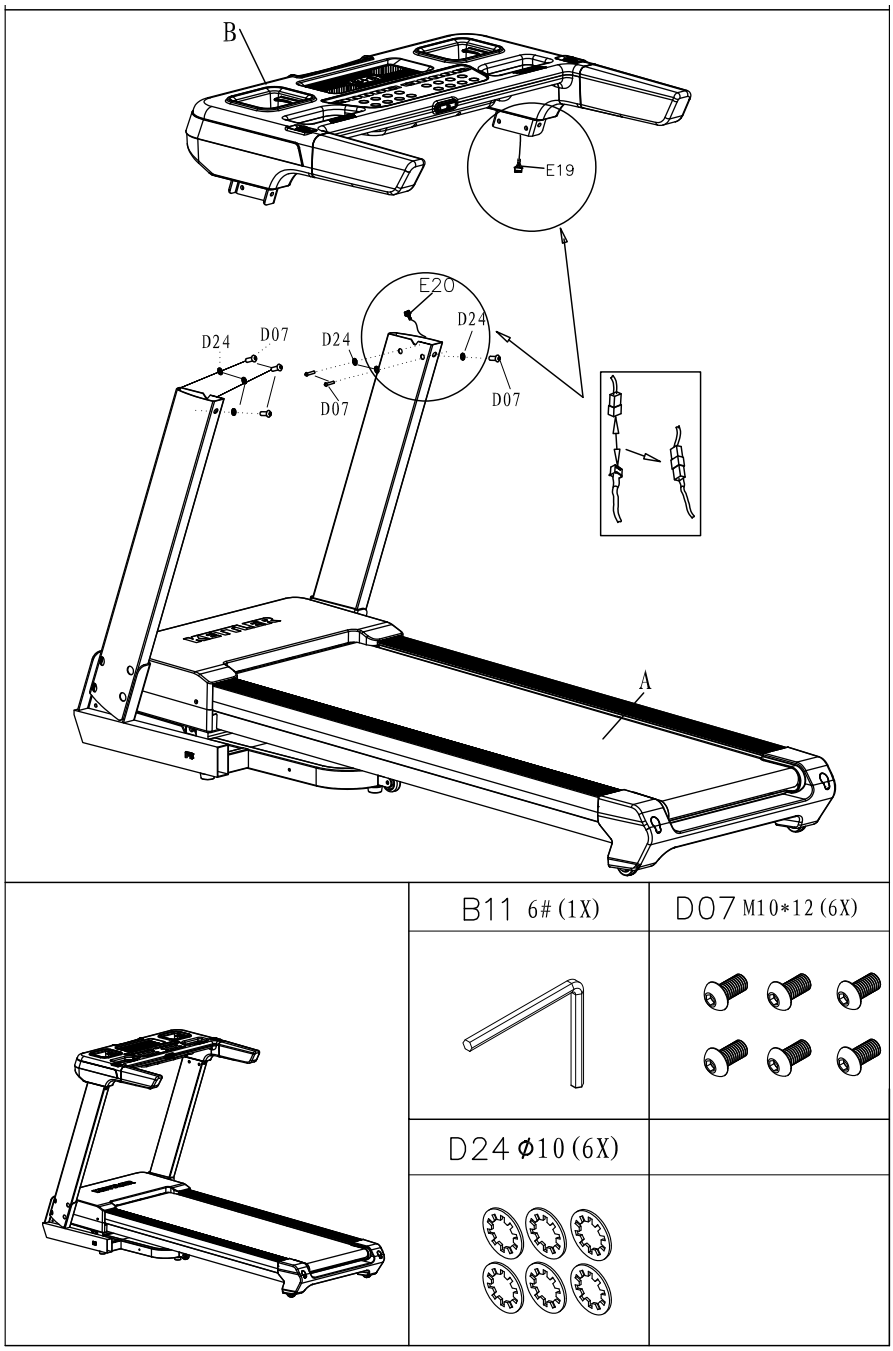

Step 4: Assembly of the console assembly and the tablet holder

Tools: Allen wrench (B10), Phillips screwdriver (B09)

► **ATTENTION**

+ In the following step, please pay attention that you don't pinch the cables.
+ Make sure that the cable are connected correctly.

1. Connect the wires of the console base (B) with the cables of the console assembly (C).
2. Fix the console assembly (C) and the console small cover (C36) to the console base (B) with four bolts (D09) and two screws (D21).
3. Attach the tablet holder (E25) to the console assembly (C).

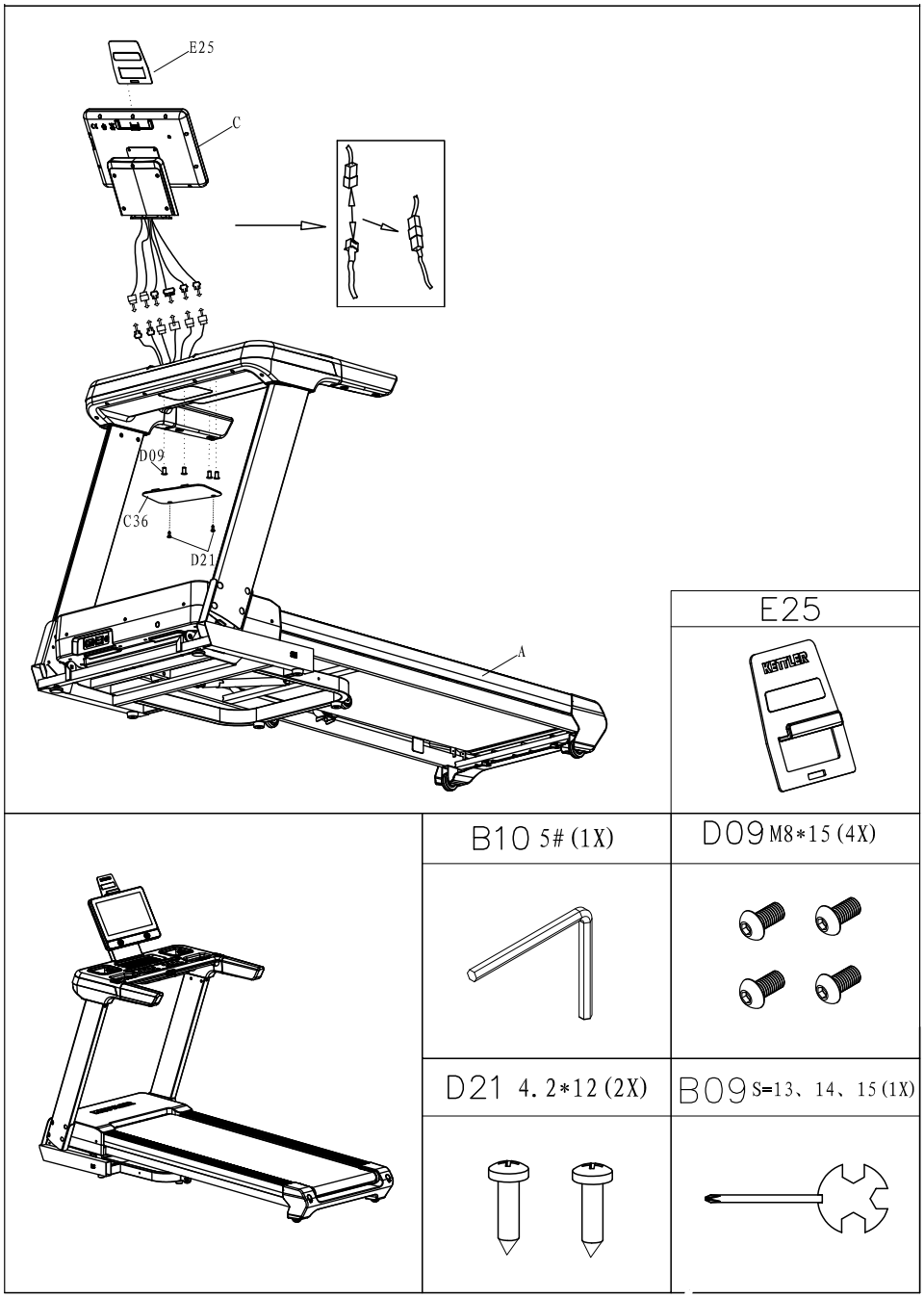

Step 5: Release of the first transport lock

Tools: Allen wrench (B10)

1. Release the transport lock (f) on the side of the treadmill.

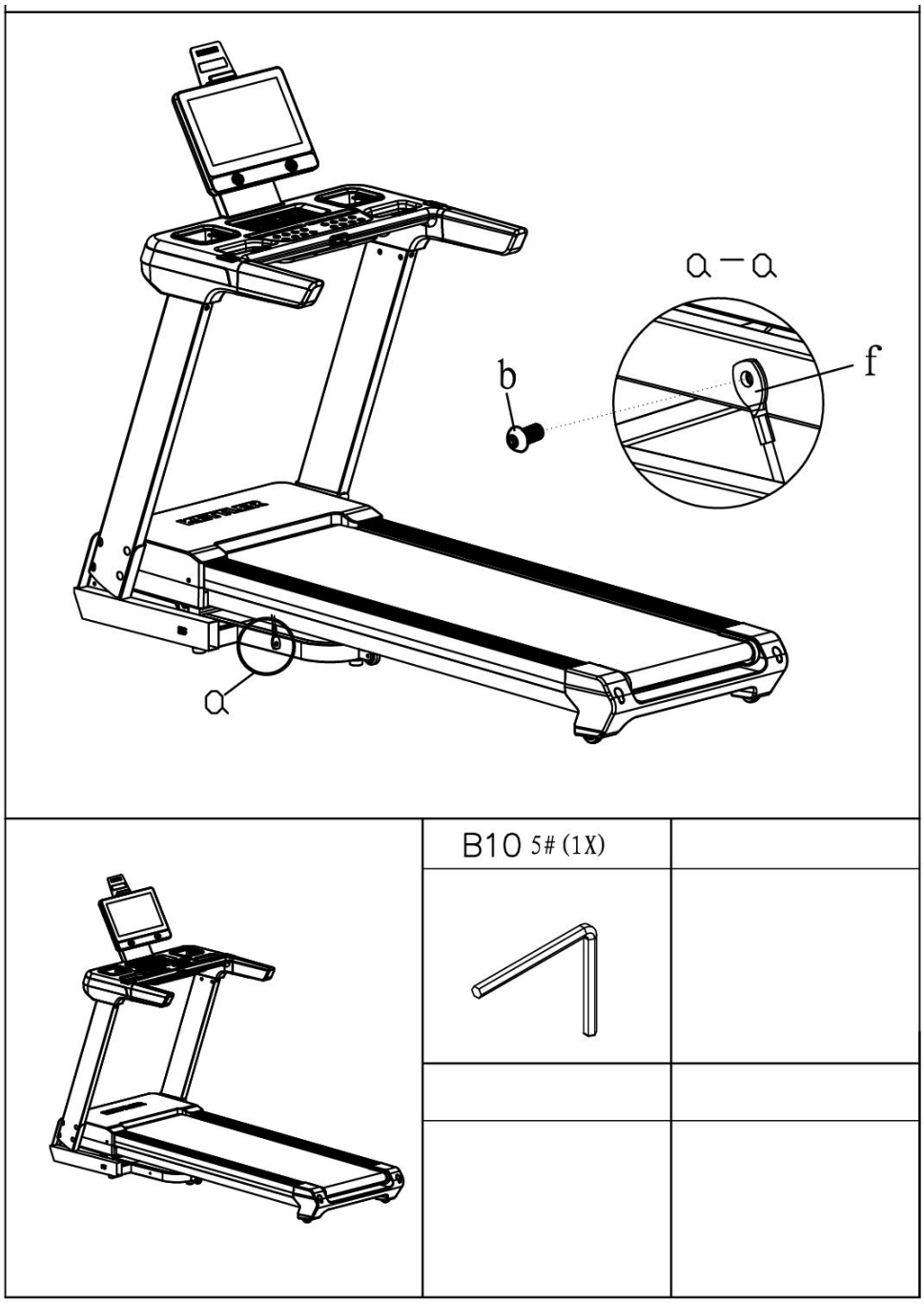

Step 6: Release of the second transport lock

Tools: Allen wrench (B10)

1. Release the transport lock (f) on the underside of the treadmill.

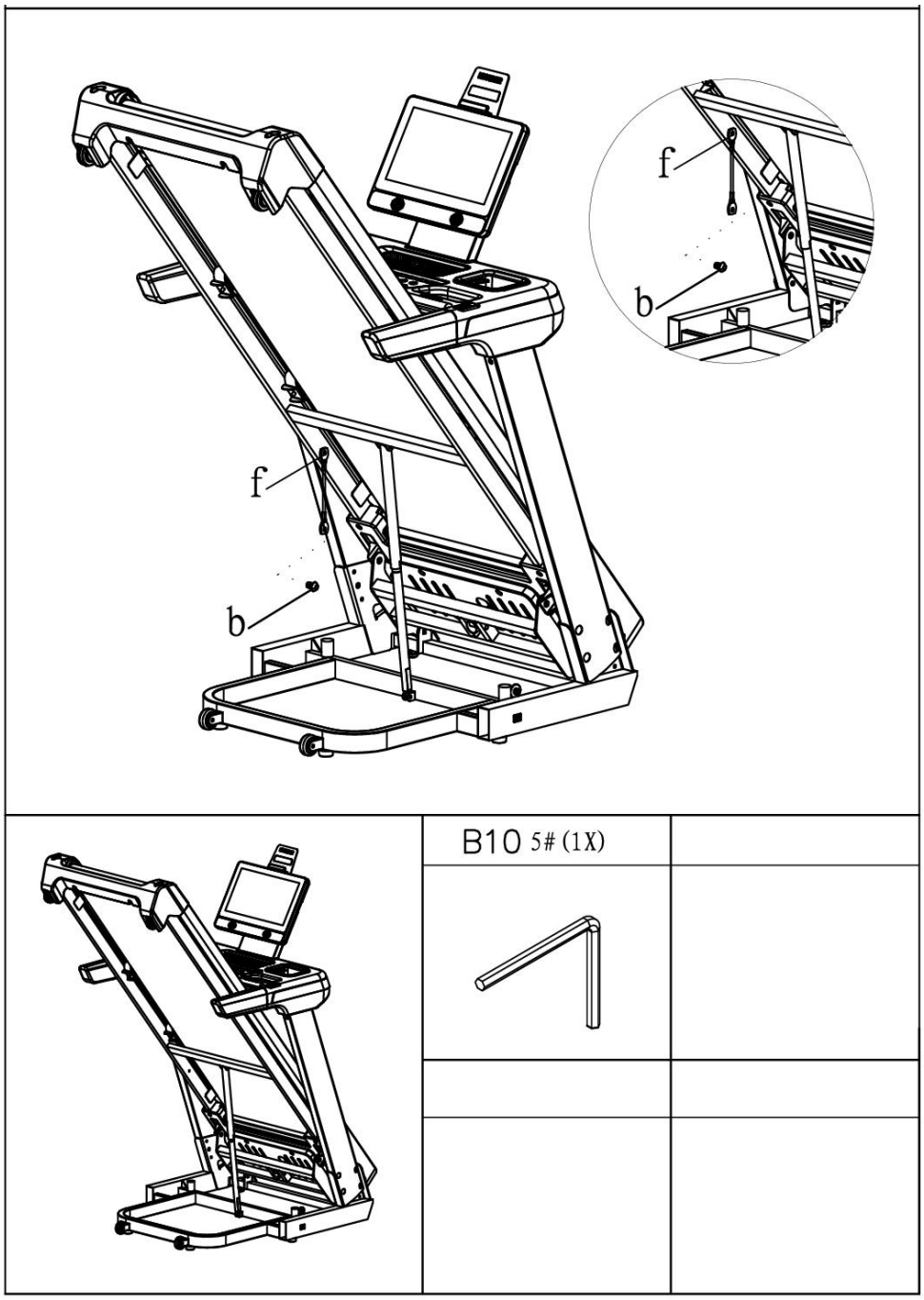

Step 7: Attach the safety key

1. Connect the safety key (C21) to the console base (B).
2. Make sure all screws are tightened securely.

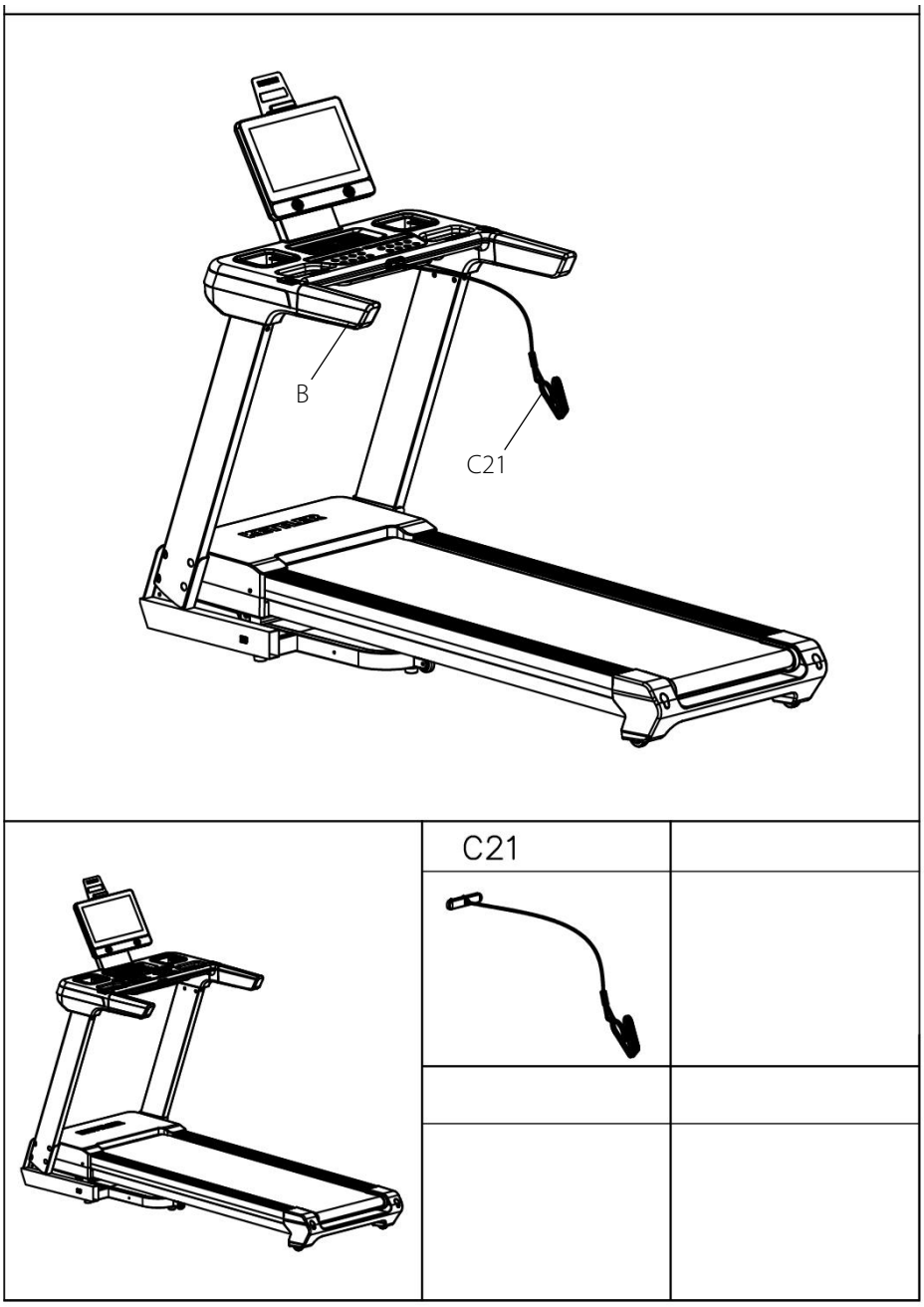

Step 8: Assembly of the rear covers

1. Attach the left rear cover (C19) to the main frame (A).
2. Attach the right rear cover (C20) to the main frame (A).

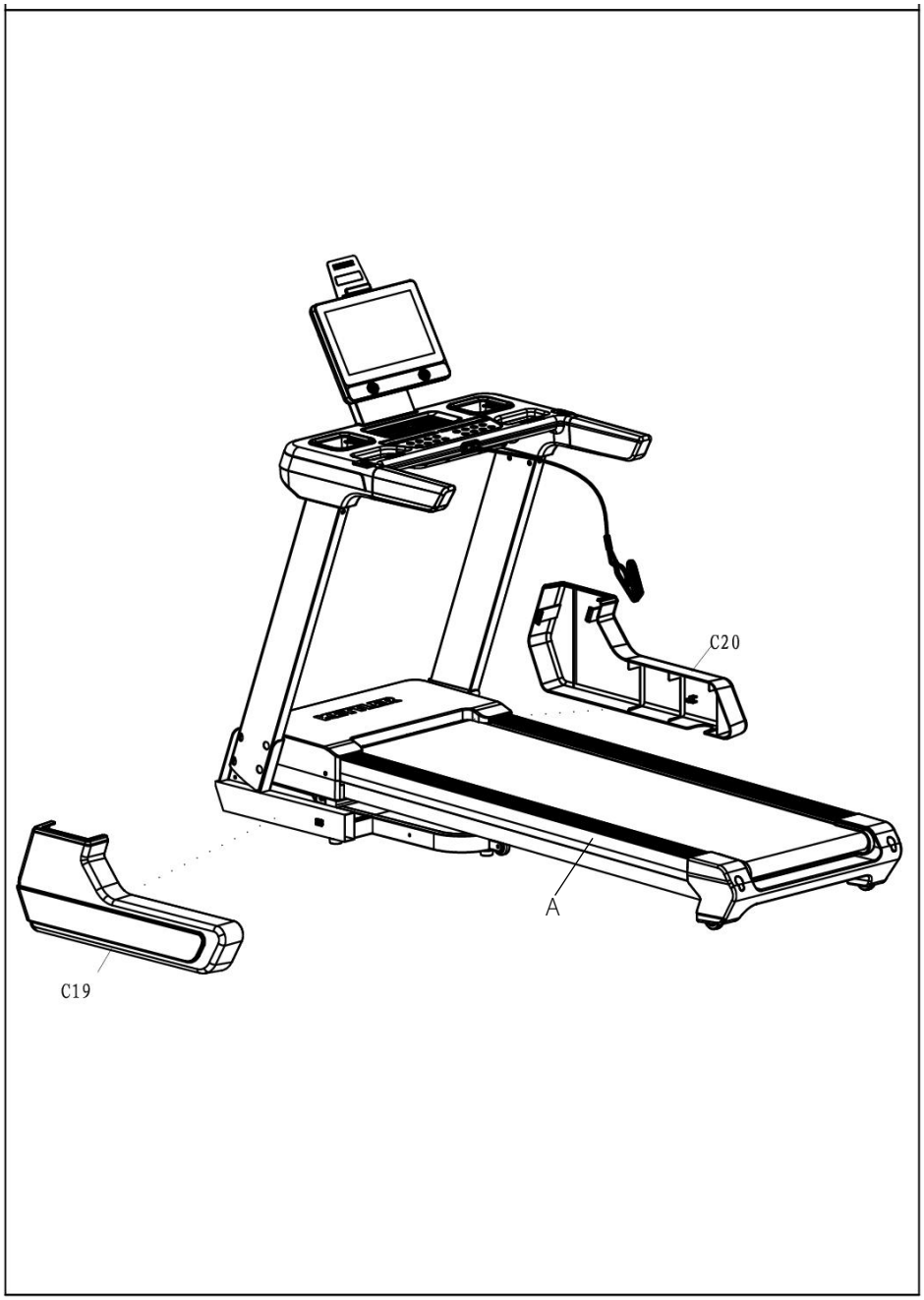

Step 9: Alignment of the feet

If the floor is uneven, you can stabilize the treadmill by turning the two setting screws under the main frame.

⚠ **WARNING**
The treadmill is equipped with high-pressure shock absorbers that can cause the treadmill to suddenly open if handled incorrectly. For more information, refer to the section 2.1 of this manual.

1. Lift the treadmill on the desired side and rotate the setting screws under the main frame.
2. Rotate the screws clockwise in order to remove them and to raise the running surface.
3. Rotate them counterclockwise in order to lower the running surface.

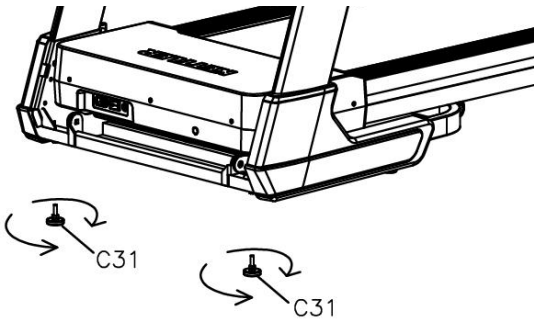

Step 10: Connecting the equipment to the mains supply

► **ATTENTION**
The equipment must not be connected to a multiple socket, otherwise it cannot be guaranteed that the equipment will be supplied with sufficient power. Technical errors can result.

Plug the power plug into a wall outlet that complies with the instructions in the chapter on electrical safety.

Correctly Getting On and Off

1. To step onto the treadmill, grip the handrails with both hands and step onto the treadmill one foot at a time.
2. To get off, grip the handrails with both hands and step off the treadmill one foot at a time.

NOTICE

+ Familiarise yourself with all the functions and setting options of the device before starting training. Have the proper use of this product explained to you by a specialist.
+ Always start your training with low intensity and increase evenly and gently. End your training with a cool-down phase. If you are unsure, please consult your physician.

SAFETY KEY

WARNING

+ For your safety, the device is equipped with an EMERGENCY STOP function. The equipment can only be operated if the safety key is correctly attached to the contact point of the cockpit. If the safety key is no longer on the contact point, the equipment automatically stops. Therefore, the Safety Key cord with the clip must be attached to your clothing before every training session. If you want to quickly stop the treadmill, if you can no longer control the speed, or if another emergency occurs, remove the safety key from the cockpit using the cord.
+ To enable the safety key to detach from the contact point of the cockpit in the event of a fall, the safety key clip must be firmly attached to your clothing!
+ Make sure that the safety key is not accessible to children.

3.1 Display Overview

The following chapters provide a detailed overview of all console functions.

3.2 Start Display

The home screen is displayed after switching on the console. A guest profile and saved user profiles are available for selection.
The following chapters and subchapters provide a detailed description of the console functions.

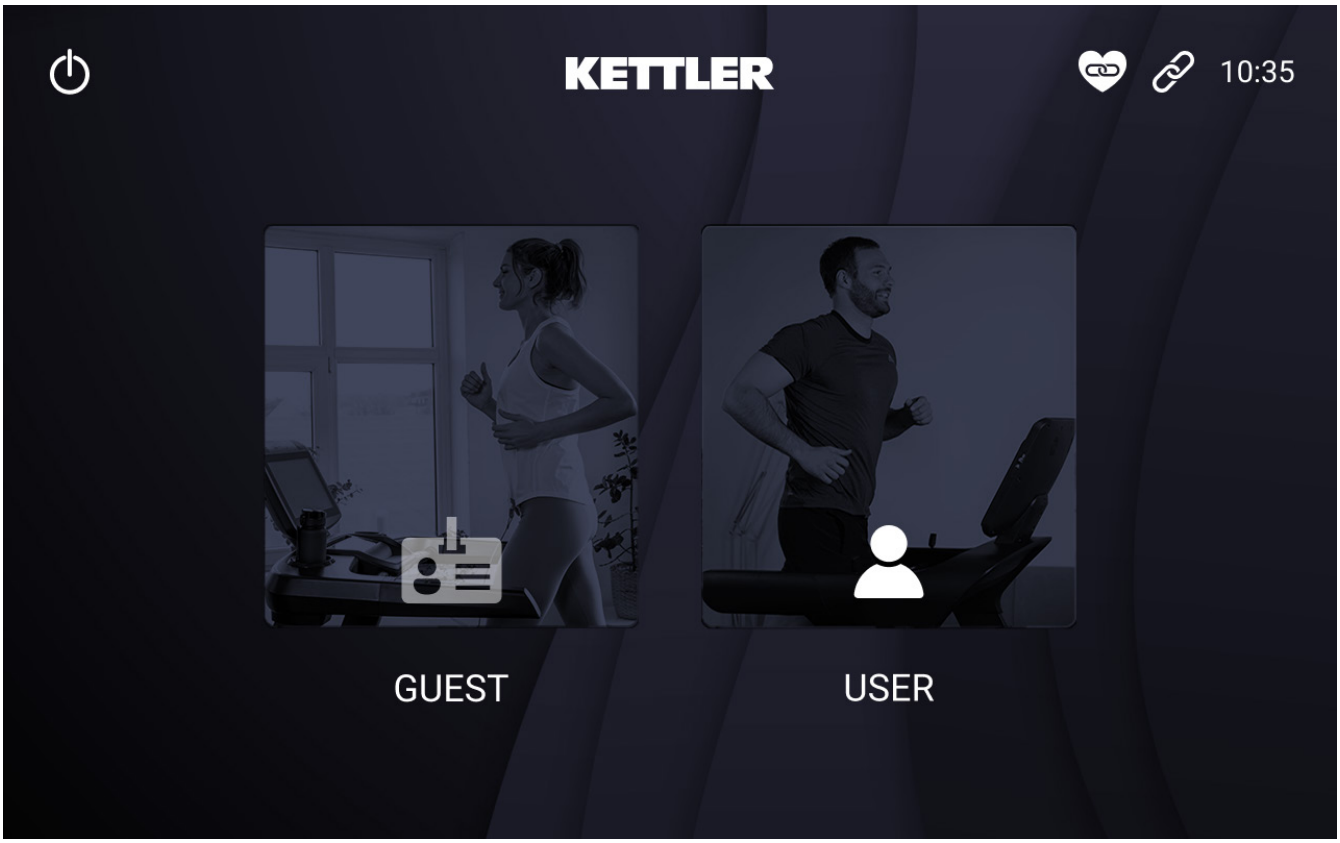

ⓘ **NOTICE**
To start a workout, log in with a guest profile or a saved user profile. Refer to the chapter **Training profiles**.

3.3 Home Area

The home area provides an overview of the console functions.

***Prerequisite**: Log in with a guest profile or a user profile to access the home area. Refer to the chapter **Training profiles**.*

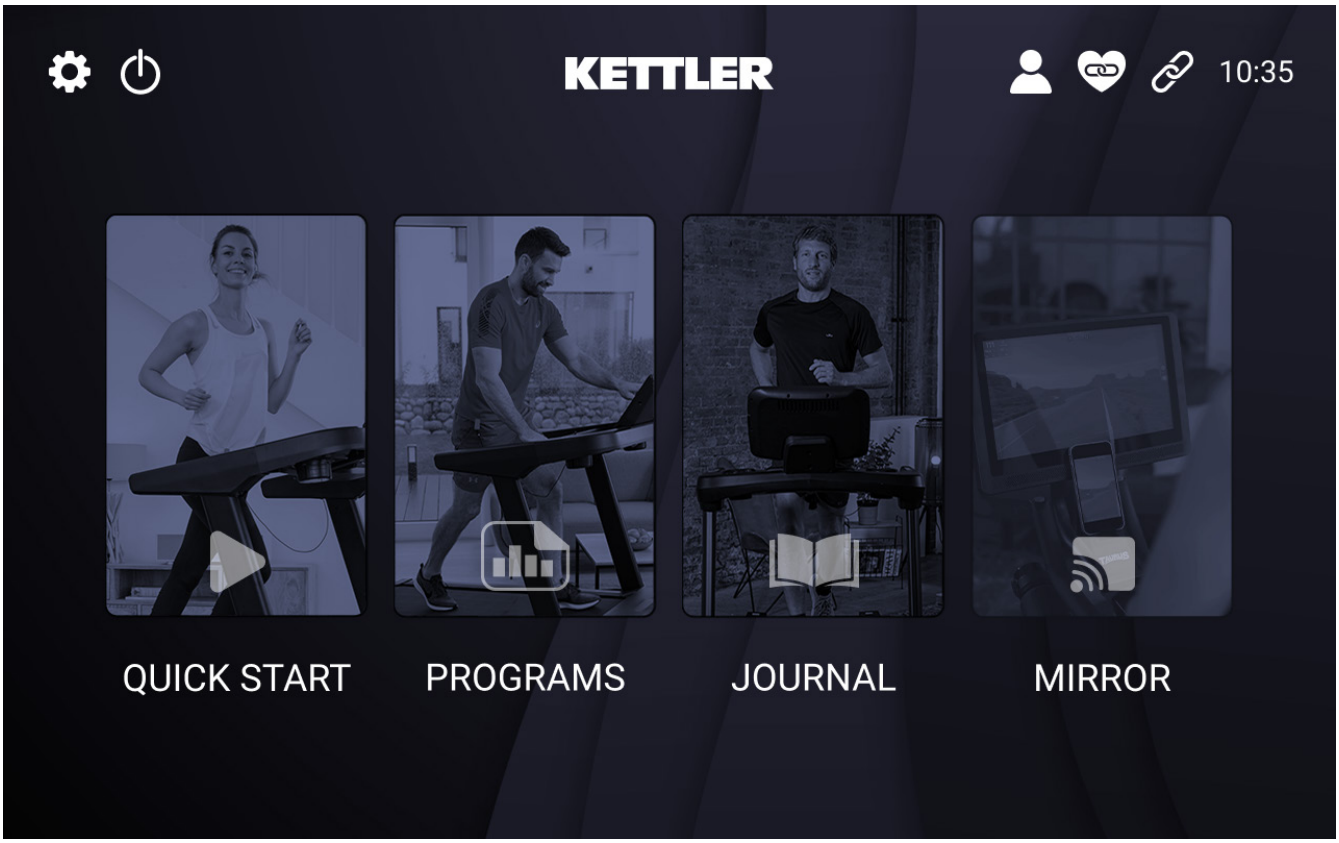

3.3.1 Home Selection

The following table provides an overview of the options available in the Home area.

SELECTION	DESCRIPTION
QUICK START	Start a workout without preset settings
PROGRAMMES	You open the programme selection
JOURNAL	You open your training log
MIRROR	Mirror your device's screen to the console

3.3.2 Menu Navigation Overview

The following table shows the top menu items.

DISPLAY	SELECTION	DESCRIPTION
	SETTINGS	Open the system and network settings
	OFF	Put the console into standby mode
KA	**USER PROFILE / GUEST PROFILE**	Open the currently logged-in guest or user profile

	CHEST STRAP CONNECTION	Indicates whether a chest strap is connected
	FTMS	Indicates whether an FTMS or wireless connection is active.

3.4 Settings

In the settings, you can adjust system settings, connect your device to Wi-Fi, and check for updates.

ⓘ **NOTICE**
To access the settings, tap in the Home area.

3.4.1 System Settings

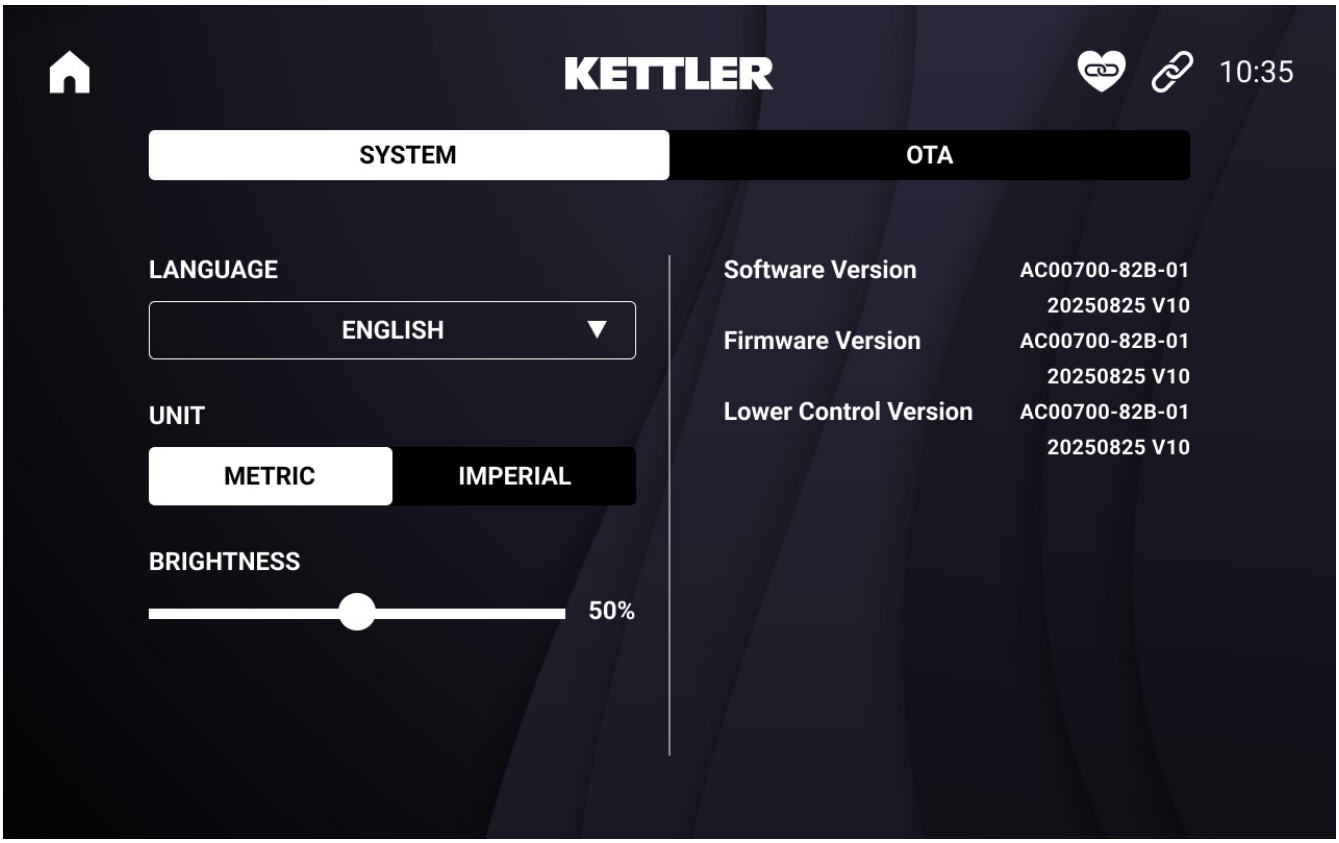

ⓘ **NOTICE**
In the system settings, you can view the software, firmware, and lower control versions.

In the system settings, you can make general adjustments:

Change language:

1. Tap the box with the currently selected language.

A drop-down menu opens.

2. Select the desired language.

Change unit of measurement:

1. Choose between Metric (kilometers) and Imperial (miles).

Change brightness:

1. Adjust the slider.
2. To exit the settings and return to the Home area, tap .

→ *You are in the Home area.*

3.4.2 Settings: WI-FI and Updates

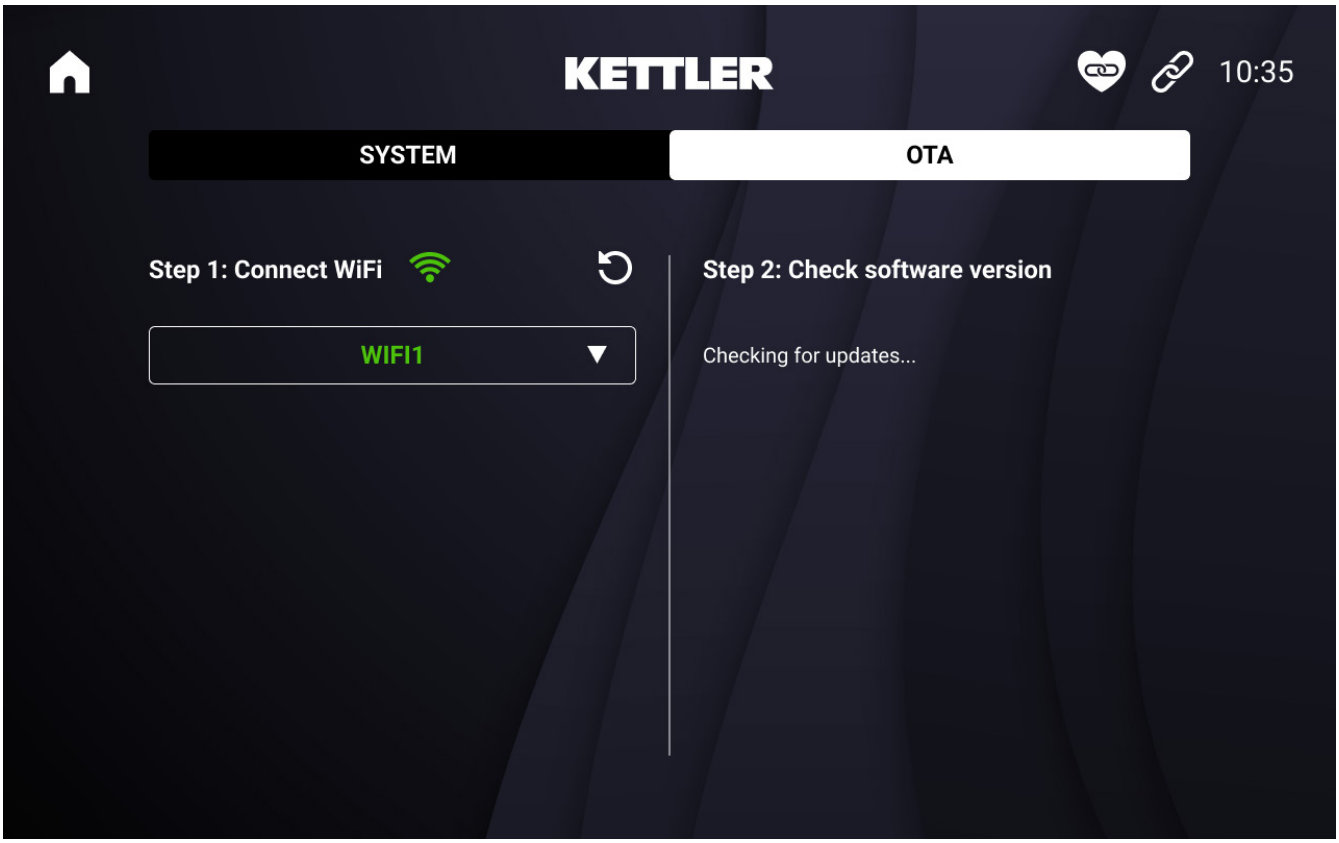

Connect to Wi-Fi:

1. Tap the WIFI field.
2. Tap to refresh the list.
3. Select your network.
4. Enter your Wi-Fi password.

5. Confirm the entry.

You are connected to Wi-Fi.

6. To exit the settings and return to the Home area, tap ⌂.

→ ***You are in the Home area.***

Update software version:

ⓘ **NOTICE**
Please note that a Wi-Fi connection is required for the update.

1. Tap CHECK.

If an update is available, UPDATE is displayed. If no update is available, your console is up to date.

2. Tap UPDATE.

The console downloads the update.

3. To exit the settings and return to the Home area, tap ⌂.

→ ***You are in the Home area.***

3.5 Training profiles

You can train as a guest or as a saved user. An explanation of the training profiles can be found in the following subsections.

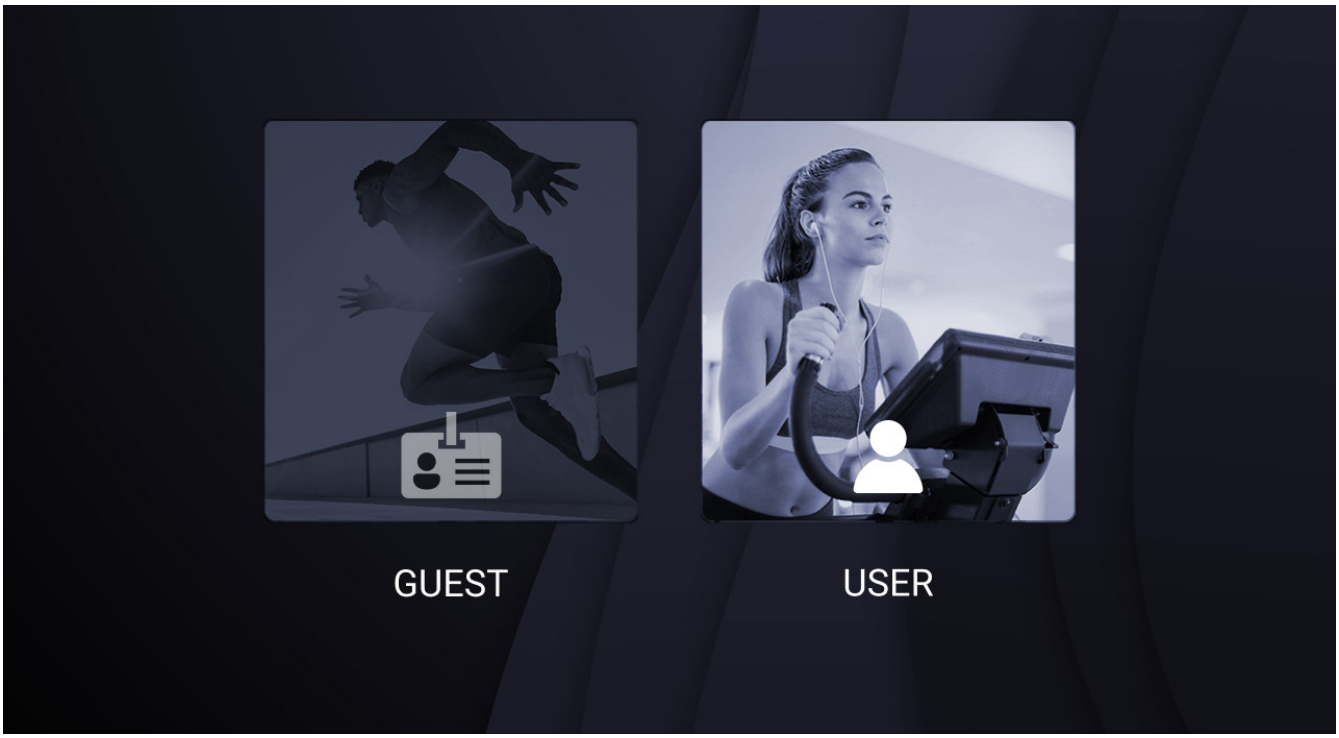

ⓘ **NOTICE**
When you turn on the console, you are taken to the overview of guest and user profiles.

1. Tap in the Home area to open the guest profile settings. Tap in the Home area to open the user profile selection.

Refer to the following subsections.

3.5.1 Training as a Guest

You can train using a guest profile. In the guest profile, you can enter your training data – this data is saved until the console is restarted or turned off.

NOTICE

+ Your configured user programmes and training log entries remain saved.
+ To return to the start screen without saving your data, tap .

Set up a guest profile:

Prerequisite: You are in the guest profile settings.

1. Enter your data.
2. Confirm with .

→ ***Your data is saved until the next restart.***

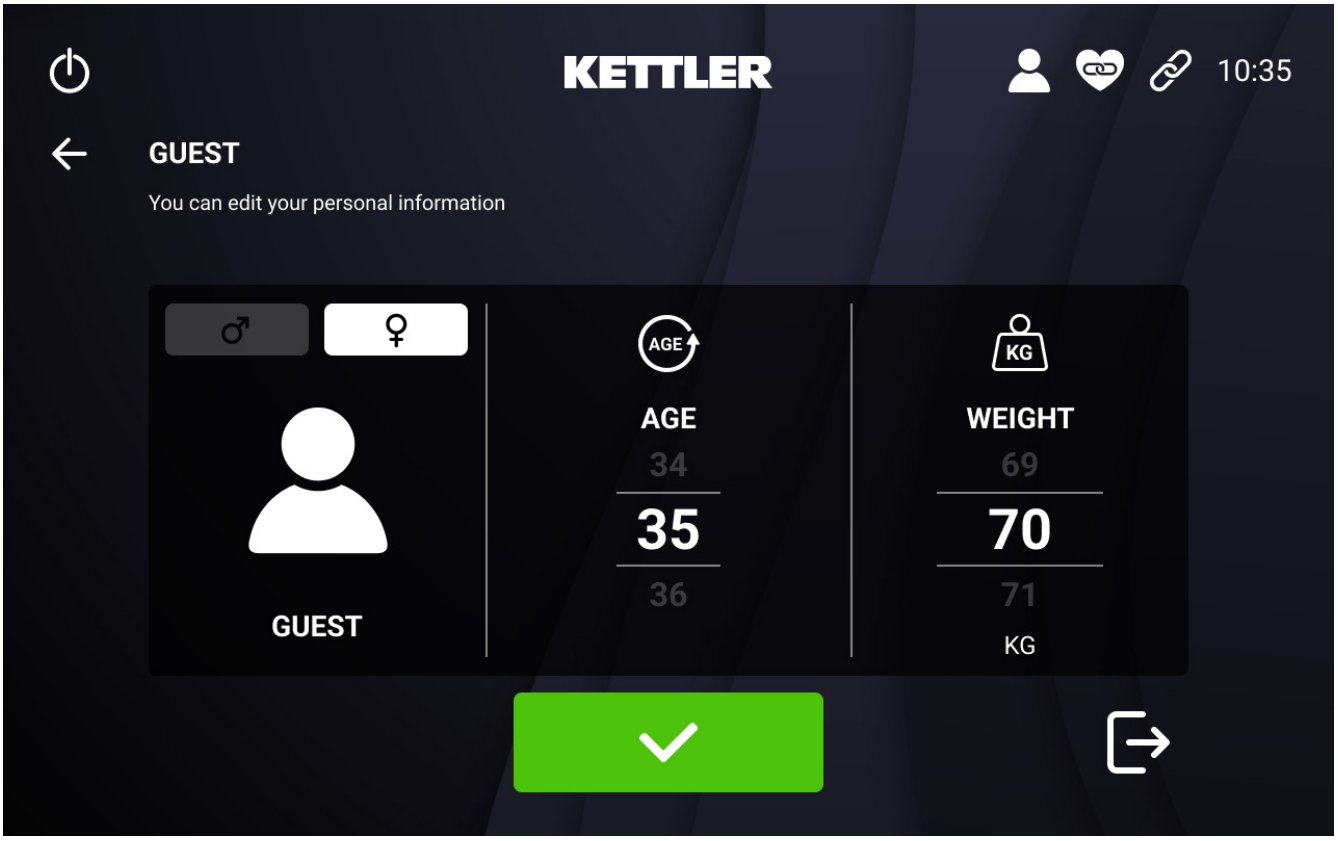

The following table shows the settings available for the guest profile:

SELECTION	DESCRIPTION
GENDER	**Selection:** + Male ♂ + Female ♀
AGE	**Selection:** 10–99
WEIGHT	**Selection:** + 20–200 kg + 44–440 lb

Log out of the guest profile:

1. Open the guest profile via .
2. Tap .

→ ***Your guest profile is logged out, and you can switch to a user profile.***

3.5.2 Training with a user profile

You can create up to four profiles that you can access at any time. Each profile can save up to four custom programmes.

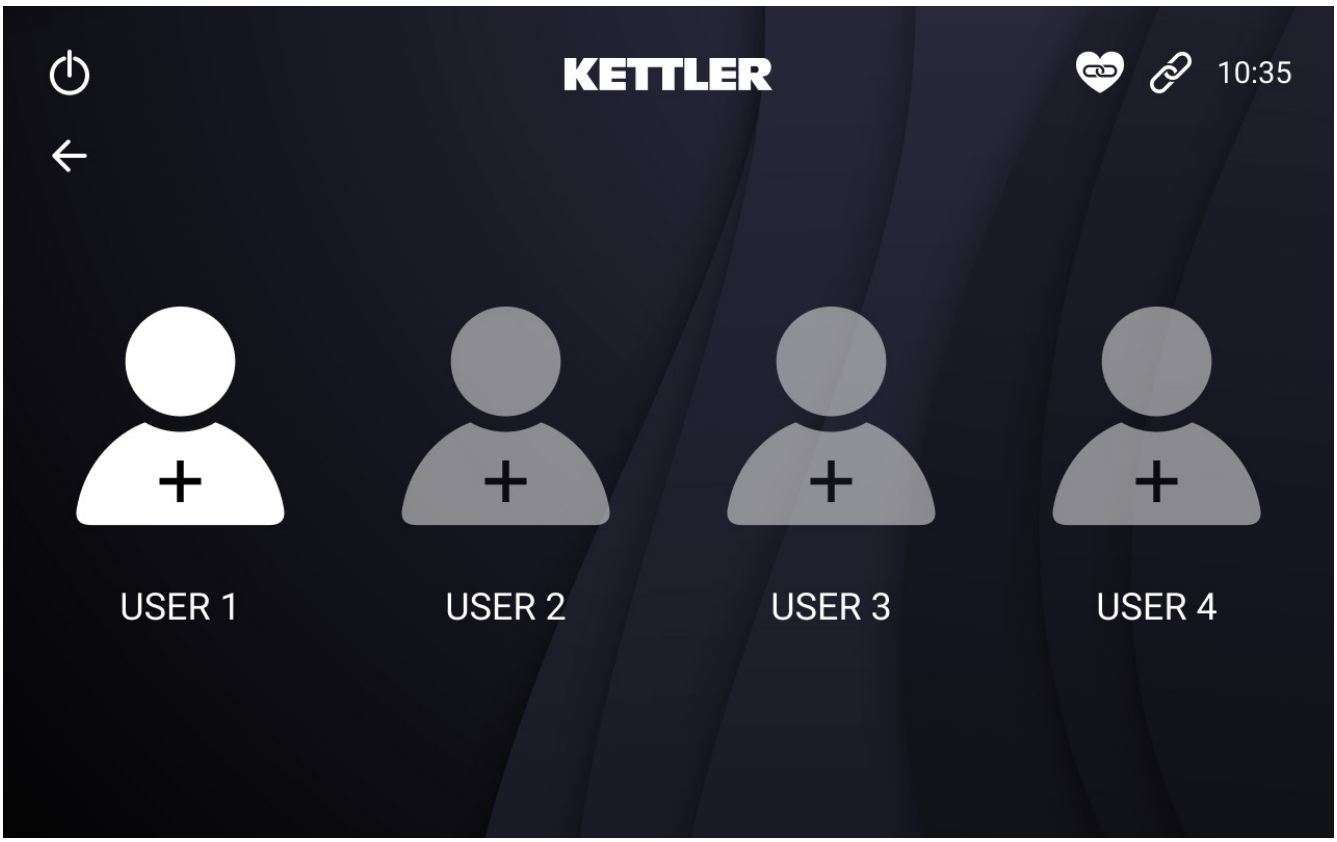

Create a profile:

Prerequisite: You are on the start screen.

1. Tap User on the start screen.
2. Tap an unassigned user .

The profile settings open.

3. Enter your data.
4. Confirm with .

→ ***Your data is saved.***

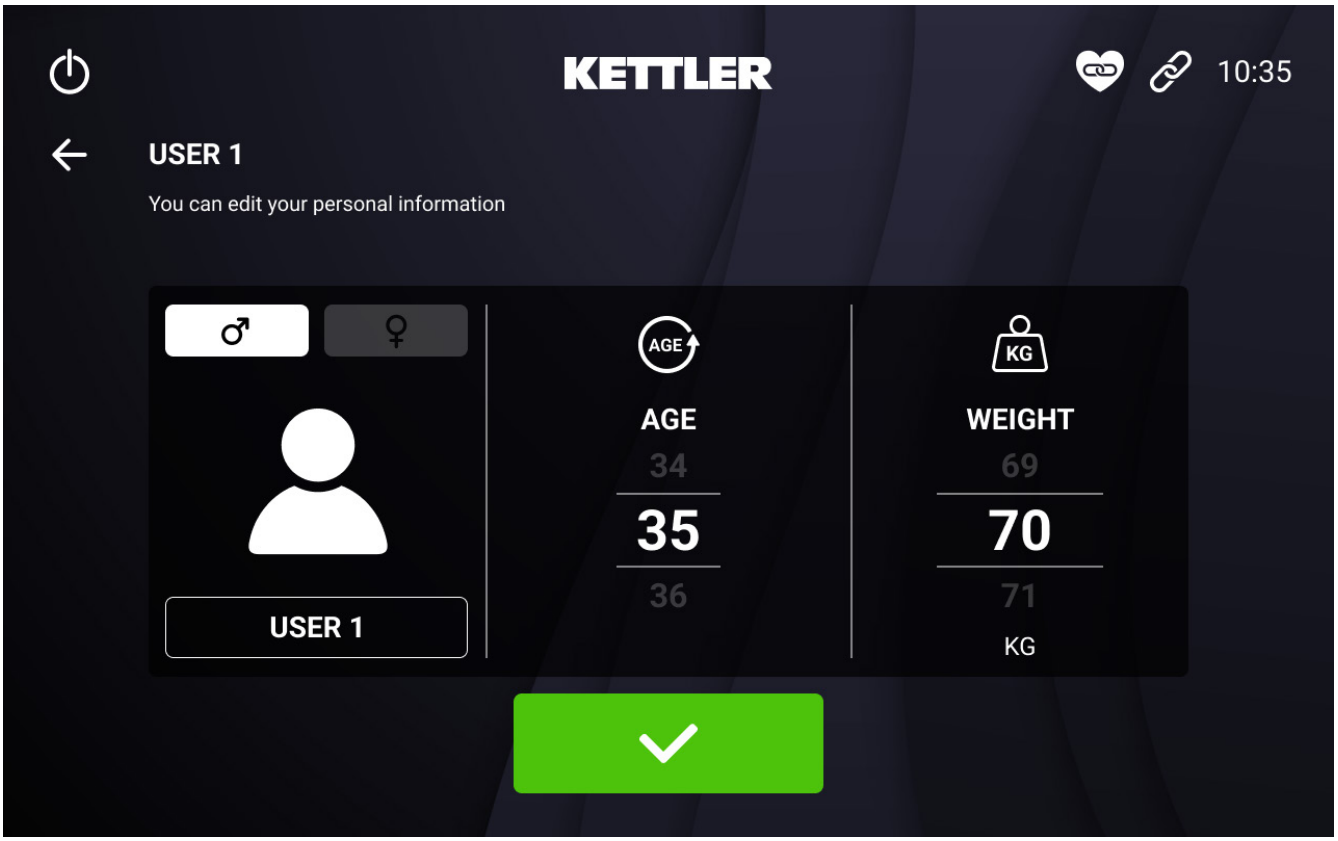

The following table shows the settings available for your user profile:

SELECTION	DESCRIPTION
GENDER	**Selection:** + Male♂ + Female♀
AGE	**Selection:** 10–99
WEIGHT	**Selection:** + 20–200 kg + 44–440 lb

Log out of the user profile:

1. Open your profile in the Home area via KA.
2. Tap .

→ *Your profile is logged out, and you can switch to a guest or another user profile.*

Delete a profile:

1. Open your profile via KA.
2. Tap .
3. Confirm the entry.

→ *The profile is deleted – you can create a new one.*

3.6 Training programmes

Your device offers a wide range of training programmes to support you in achieving your training goals. The following is an overview of the available training programmes.

Prerequisite: *Log in with a guest or user profile to access the Home area.*

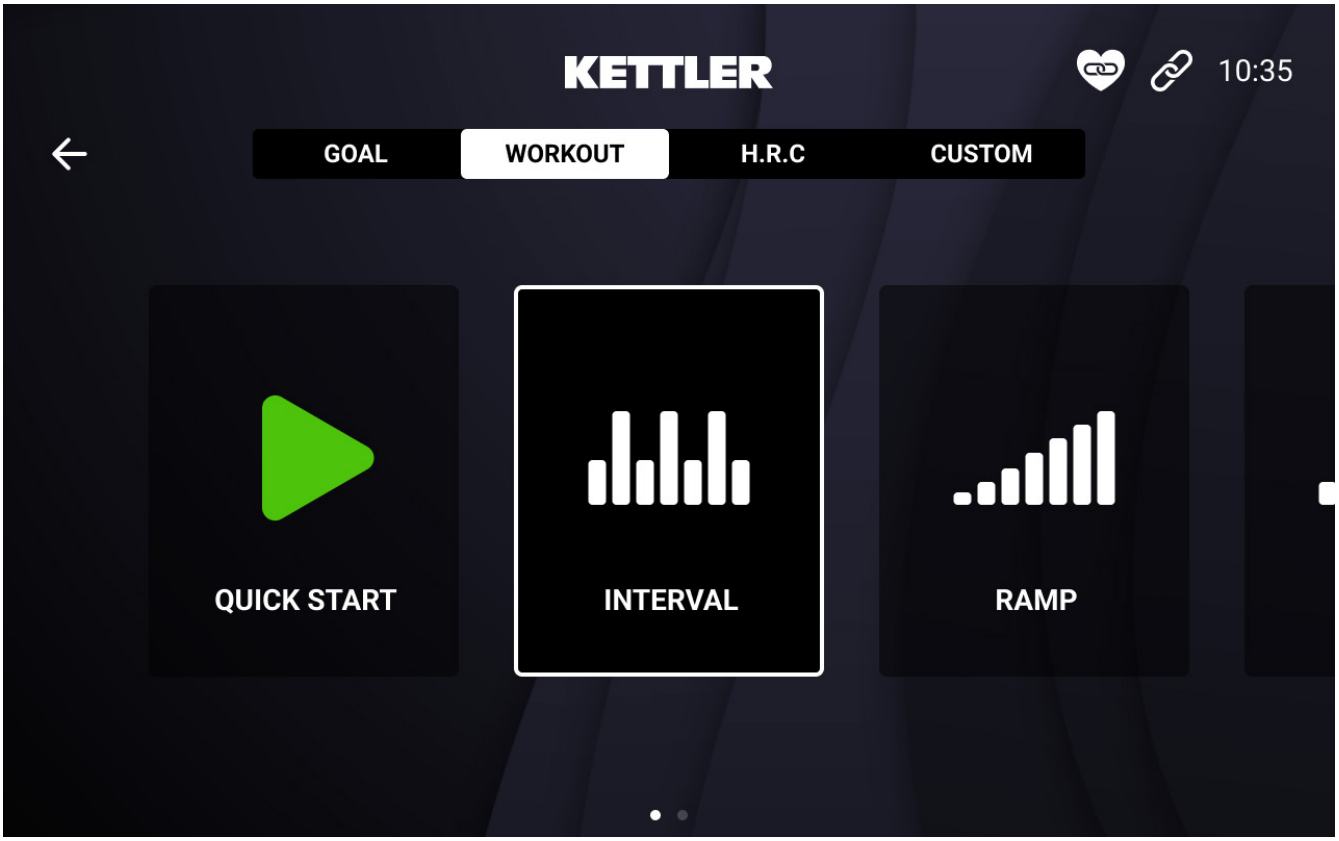

PROGRAMME	DESCRIPTION	QTY
QUICK START	Manual training without preset settings	1

GOAL	Enter a target value for your workout, which will count down	3
H.R.C	The speed is adjusted so that you reach your target heart rate	4
WORKOUT	Training with a preset profile. Adjust the training data in advance if needed	8
CUSTOM	Create your own training programme	4

The following subsections provide a detailed description of the training programmes.

3.6.1 Quick Start

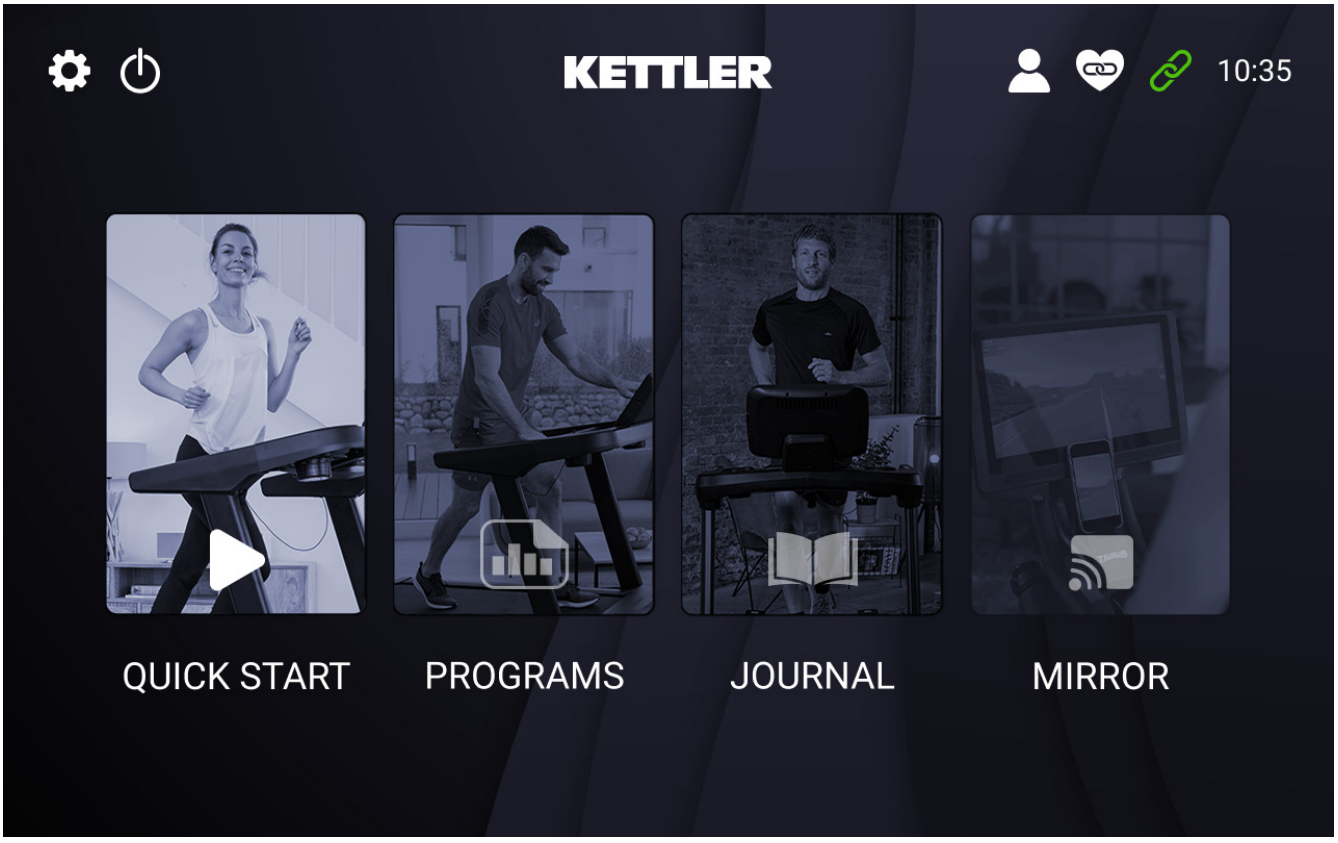

To start a workout without preset settings, you can select the Quick Start programme.

ⓘ **NOTICE**
Refer to the chapter **Training Display** for an explanation of the displayed data.

Starting the Quick Start programme:

1. Tap Quick Start.

1.1. Or: Select Quick Start in the training programmes.

The programme starts.

2. Set the desired speed and incline.
3. Tap ⏸ to pause the programme.
4. Tap ▶ to resume the programme.

4.1. Tap ■ in pause mode to end the programme.

*After completing the workout, a summary of your training data will be displayed. Refer to the chapter **Training Summary**.*

5. Return to the home area with 🏠.

→ ***You are now in the home area.***

3.6.2 H.R.C Programme

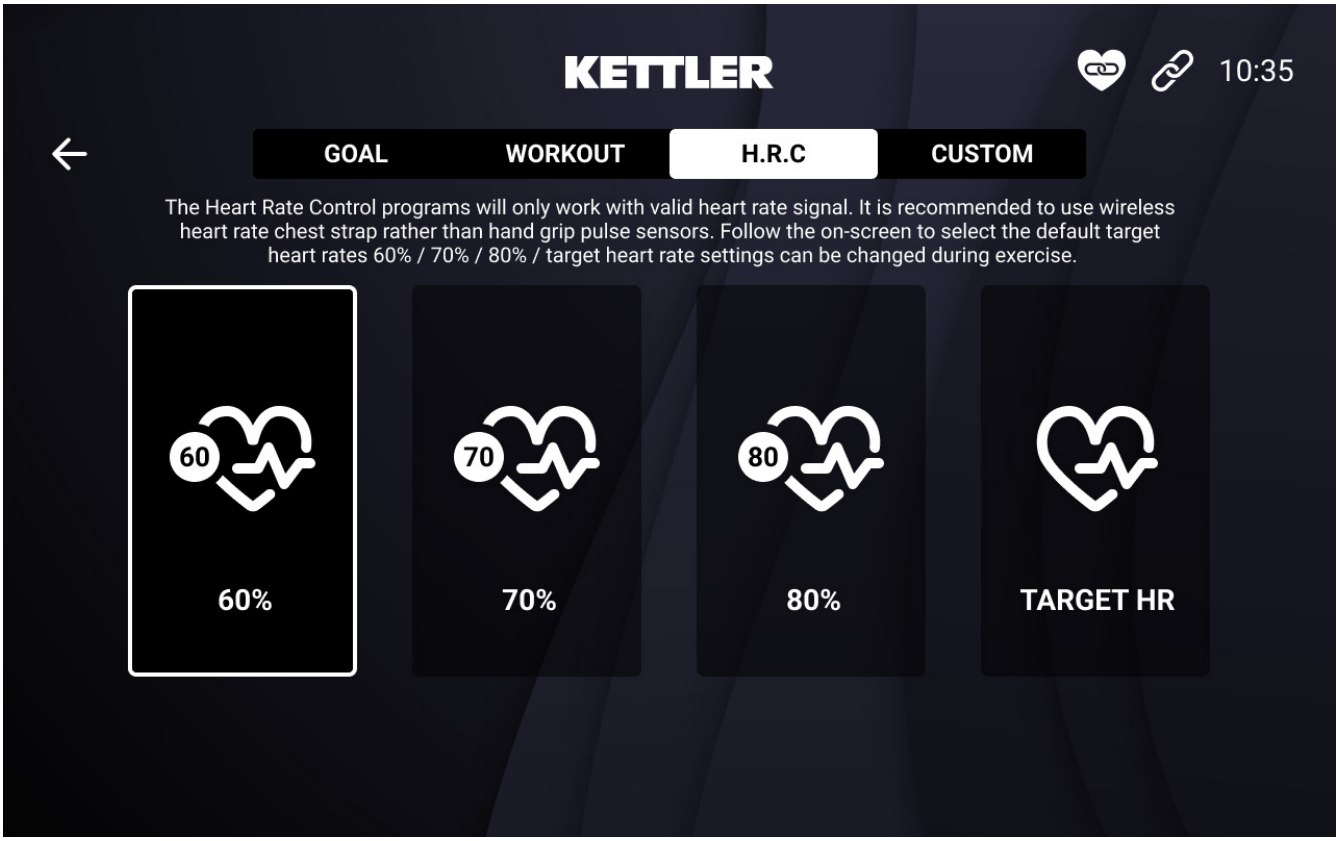

⚠ **WARNING**

Your training equipment is not a medical device. The heart rate measurement of this device may be inaccurate. Various factors can affect the accuracy of the heart rate display. The heart rate display is intended for training purposes only.

ⓘ **NOTICE**

+ Use the hand pulse sensors or a wireless chest strap to monitor your heart rate.
+ Refer to the **Training Display** section for an explanation of the displayed data.
+ If no heart rate is detected, the workout will automatically stop after 30 seconds.

With the heart rate control programme, you train based on your heart rate. The device automatically adjusts the speed to maintain your target heart rate. Four heart rate programmes are available:

+ 60%
+ 70%
+ 80%
+ User value

Starting the heart rate control programme:

1. Tap H.R.C in the programme selection.
2. Select a percentage value.

The settings menu for the programme opens.

ⓘ **NOTICE**
The data from your user profile is applied. If you are logged in with a guest profile, enter your gender, age, and weight.

3. Enter the desired training time.
4. Adjust your target heart rate.
5. Tap ▶.

The programme starts.

6. The speed is automatically adjusted to reach your target value.
7. Tap ❚❚ to pause the programme.
8. Tap ▶ to resume the programme.

8.1. Tap ■ in pause mode to end the programme.

9. The workout will end automatically once you have reached your target time.

*After completing the workout, a summary of your training data will be displayed. Refer to the chapter **Training Summary**.*

10. Return to the home area with ⌂.

→ ***You are now in the home area.***

3.6.3 Custom Programme

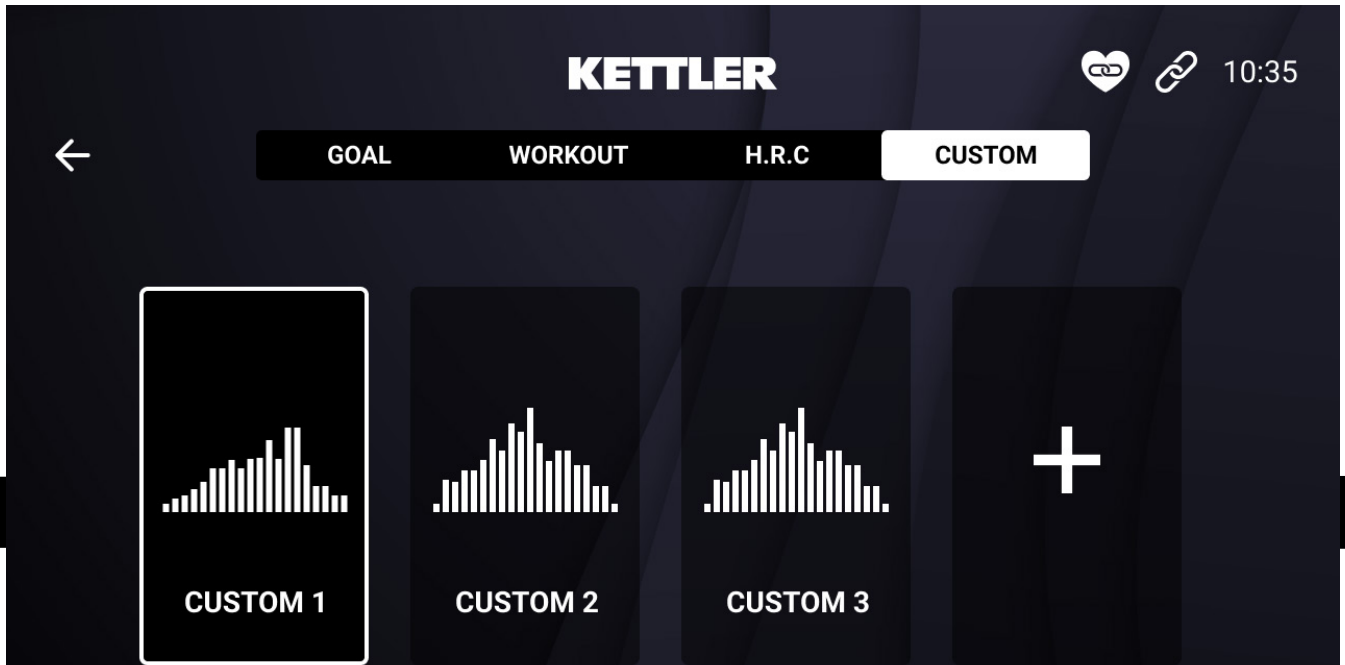

With the user-defined programmes, you can create and permanently save your own workout profiles. Four user programmes are available.

ⓘ **NOTICE**

+ You can modify saved user-defined programmes at any time.
+ The created programme is saved immediately after starting the workout and can be started at any time.
+ In the guest profile, you can save up to four programmes.
+ Each registered user can store up to four programmes.
+ Refer to the **Training Display** section for an explanation of the displayed data.

Creating a user-defined workout:

11. Tap CUSTOM in the selection menu.
12. Tap the plus icon.

ⓘ **NOTICE**

The data from your user profile is applied. If you are logged in with a guest profile, enter your gender, age, and weight.

13. Set the speed with ▼ ▲.
14. To set the incline tap ⇌ to change the view.
15. Set the incline with ▼ ▲.
16. Set the duration of the segments.
17. Switch between segments with ▼ ▲.
18. Tap ▶.

The programme starts.

19. Set the desired speed and incline.
20. Tap ❚❚ to pause the programme.
21. Tap ▶ to resume the programme.

21.1. Tap ■ in pause mode to end the programme.

22. The workout will end automatically once you have reached your target time.

*After completing the workout, a summary of your training data will be displayed. Refer to the chapter **Training Summary**.*

23. Return to the home area with ⌂.

→ ***You are now in the home area.***

3.6.4 Goal Programme

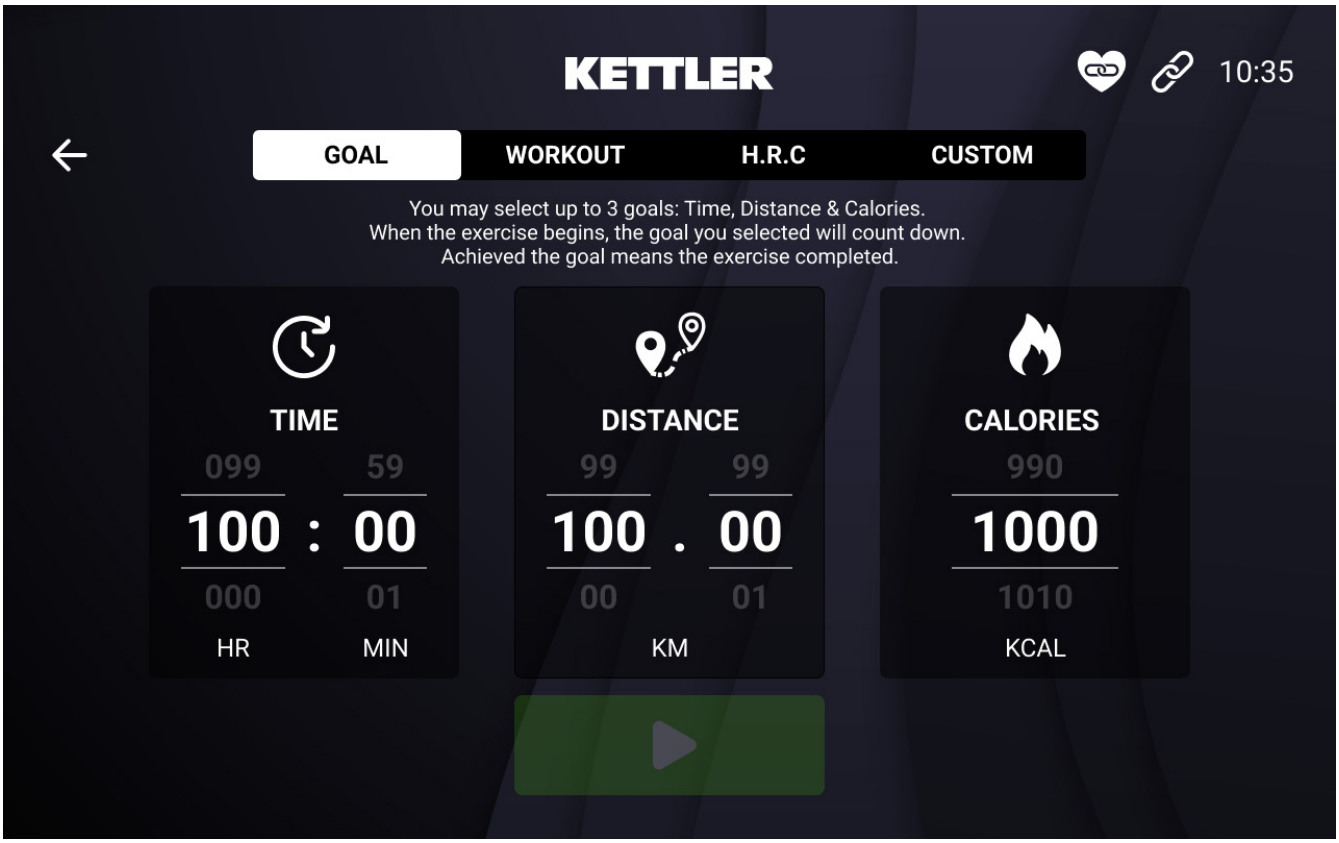

To start a target programme, select one of the three available parameters. Refer to the following overview of the target values:

SELECTION	DESCRIPTION
TIME	+ Set a time target value. + Setting range: 000:01–100:59
DISTANCE	+ Set a distance target value. + Setting range: 0.01–100.99 km
CALORIES	+ Set a calorie target value. + Setting range: 10–9999 kcal

ⓘ **NOTICE**

+ Refer to the **Training Display** section for an explanation of the displayed data.
+ Please note that only the last target value you set will be applied.

Starting the target programme:

1. Tap GOALS in the programme selection.
2. Set your desired target value.
3. Tap ▶.

The programme starts.

4. Set the desired speed and incline.
5. Tap ⏸ to pause the programme.
6. Tap ▶ to resume the programme.

6.1. Tap ■ in pause mode to end the programme.

7. The programme will end automatically once you have reached your target.

*After completing the workout, a summary of your training data will be displayed. Refer to the chapter **Training Summary**.*

8. Return to the home area with 🏠.

→ ***You are now in the home area.***

3.6.5 Workout Programme

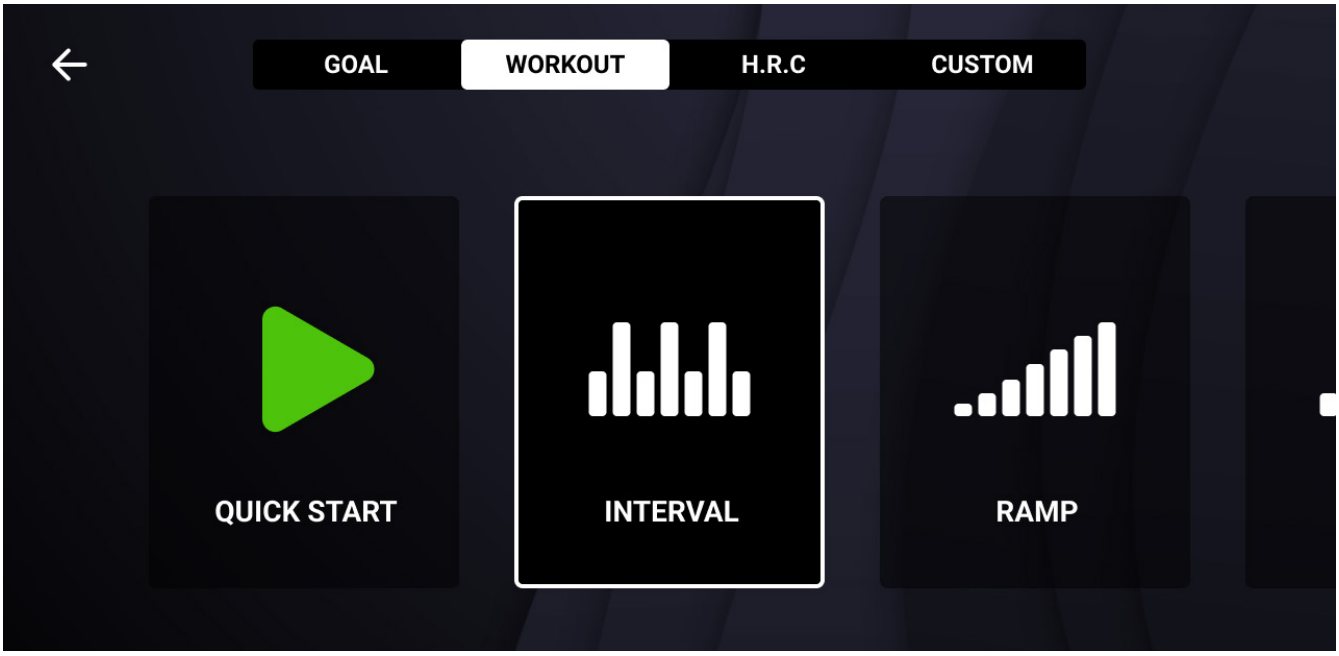

To start a preset workout, select one of the nine programmes. The programme segments are distributed evenly over the set time.

SELECTION	DESCRIPTION
TIME	+ Set a time target value. + Setting range: 000:01–100:59
MAXIMUM SPEED	+ Set the maximum speed. + Setting range: 0.8–22.0 km/h
MAXIMUM INCLINE	+ Set the maximum incline. + Setting range: 0–15

ⓘ **NOTICE**

+ Refer to the **Training Display** section for an explanation of the displayed data.

+ The segments in this programme change automatically.

Starting a preset programme:

1. Tap WORKOUTS in the programme selection.
2. Enter your desired time value.
3. Enter your desired maximum speed and incline.
4. Tap ▶.

An overview of the workout profile is displayed.

5. Tap ▶.

The programme starts.

6. Set the desired speed and incline.
7. Tap ❚❚ to pause the programme.
8. Tap ▶ to resume the programme.

8.1. Tap ■ in pause mode to end the programme.

9. The workout will end automatically once you have reached your target time.

After completing the workout, a summary of your training data will be displayed. Refer to the chapter ***Training Summary****.*

10. Return to the home area with ⌂.

→ ***You are now in the home area.***

3.7 Training Display

During your workout, the training data is displayed. You can choose from three displays:

+ Interval view
+ Time view
+ Lap view

ⓘ **NOTICE**

+ To switch the display, tap the corresponding button.
+ Switch from the current to the average value with ⇌.

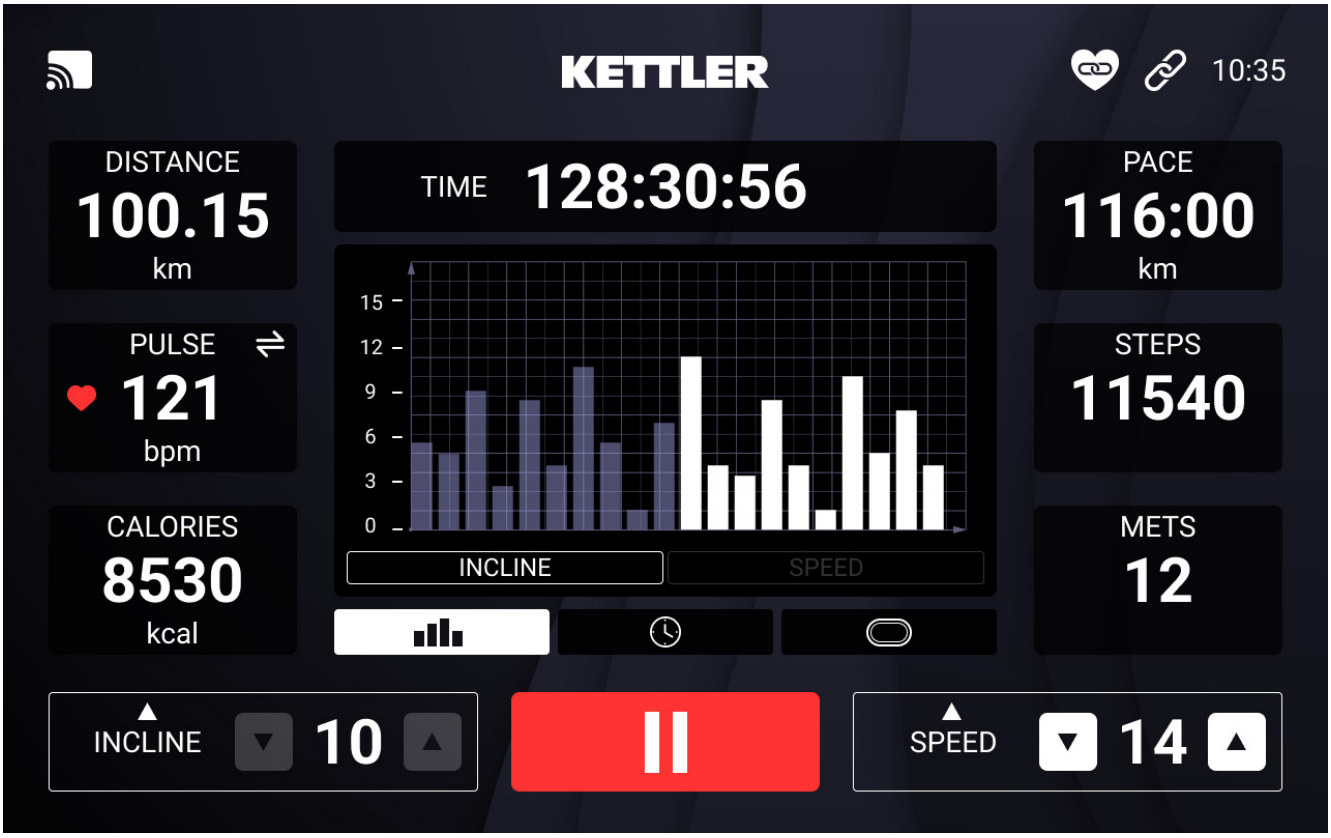

The following table provides an overview of the values displayed during the workout:

SELECTION	DESCRIPTION
TRAINING TIME	Displays the workout time
DISTANCE	Displays the distance
PULSE	Displays the current or average heart rate
INCLINE	+ Displays the current incline + Adjust the incline

SPEED	+ Displays the current speed + Adjust the speed
PACE	Displays your pace
METS	Displays the meters covered
STEPS	Displays your steps

3.8 Training Summary

At the end of a workout, the training data is summarized in the following view.

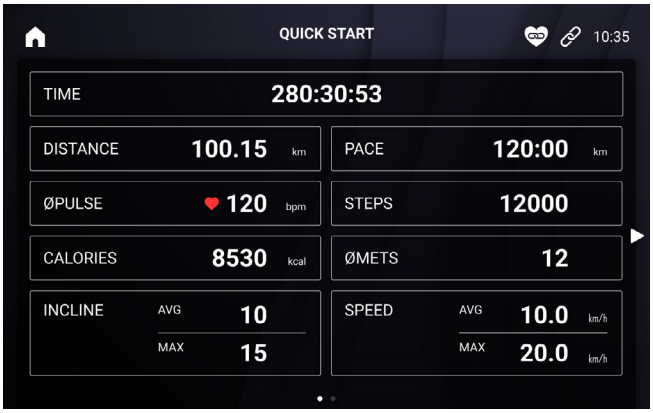

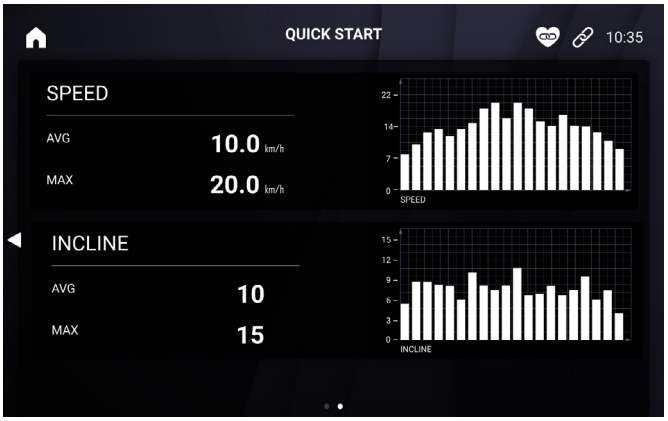

SELECTION	DESCRIPTION
PROGRAMME	Displays the completed programme
TRAINING TIME	Displays your workout time
DISTANCE	Displays the distance
INCLINE	Displays the average and maximum incline
AVERAGE PULSE	Displays your average heart rate
PACE	Displays your pace
AVERAGE CALORIES	Displays the average calories burned
AVERAGE METRES	Displays the average meters
STEPS	Displays your steps
AVERAGE/MAXIMUM SPEED	Displays your average and maximum speed

ⓘ **NOTICE**

+ If no input is made in the training summary for three minutes, the device automatically returns to the home area.
+ Tap ◀ ▶ the corresponding button to switch the page.

1. To exit the training summary, tap 🏠.

→ ***You are in the home area.***

3.9 Journal

In the training history, your recorded training data is displayed. This allows you to track your training progress more easily.

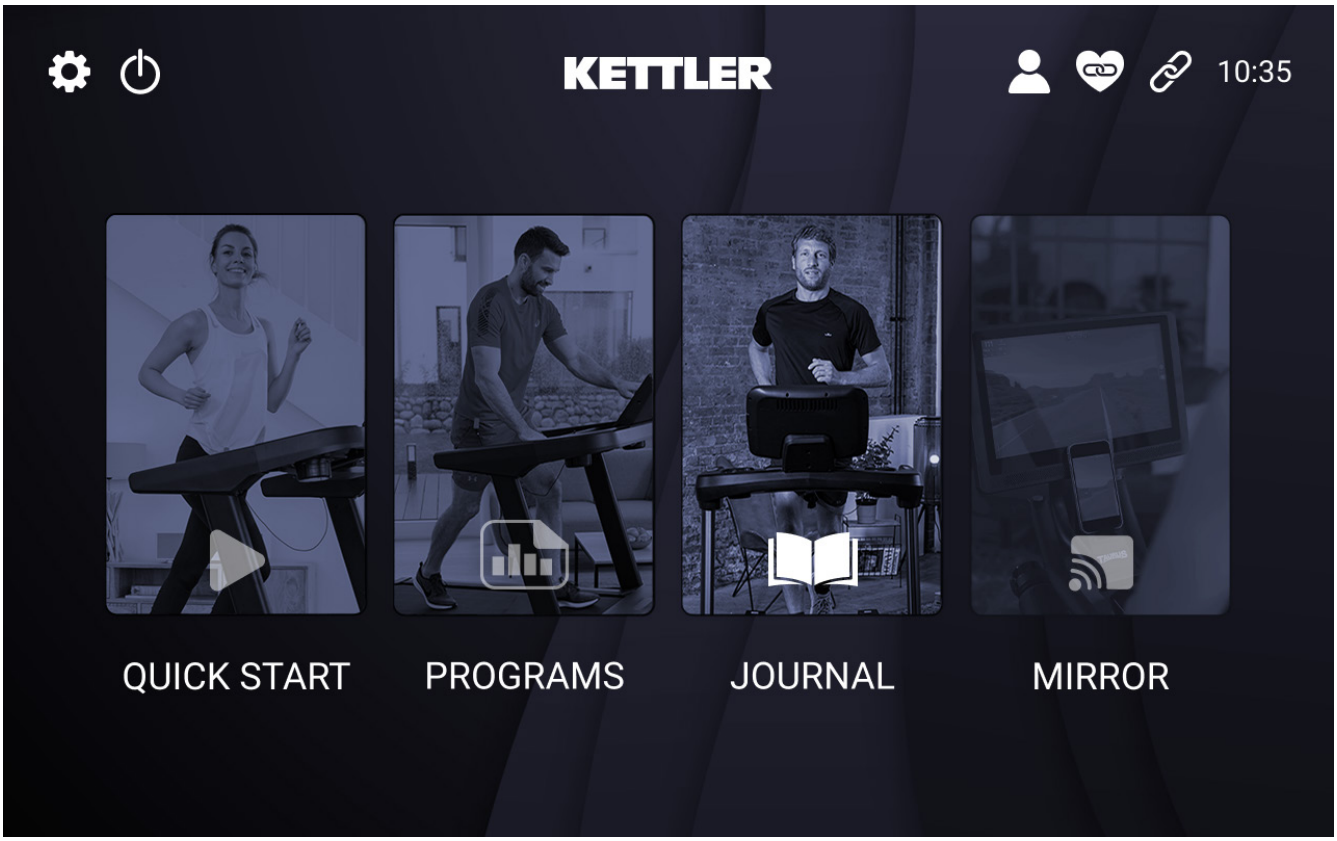

Prerequisite: You are in the home area.

1. Tap .

The journal opens.

ⓘ **NOTICE**

+ The journal contains a summary of your workouts for the week, month, and year.
+ To export your data, a USB stick must be connected to the console.
+ The file is exported as a CSV file and can be opened, for example, in Excel or OpenOffice.

2. Export your training data with .

3.9.1 Journal: Time period

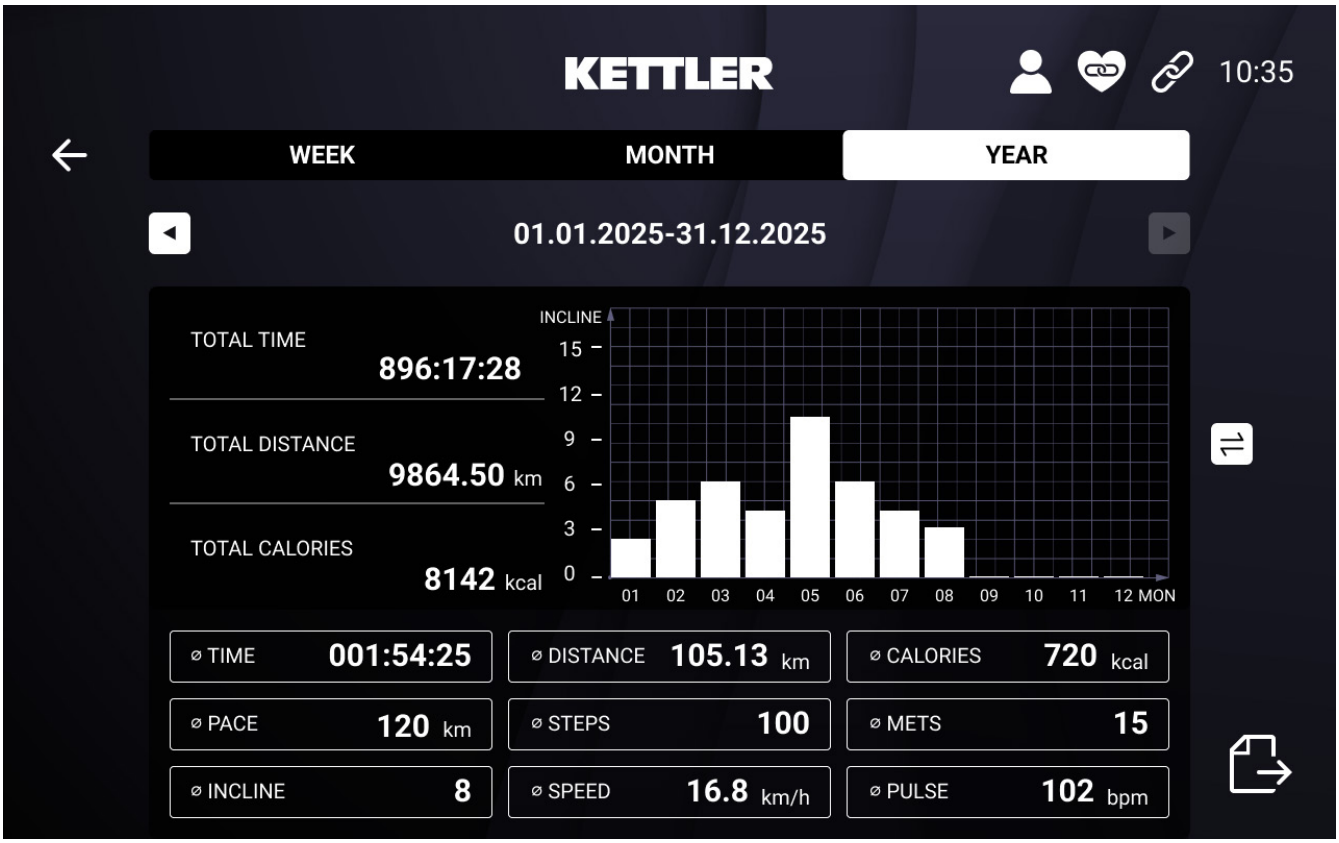

In the table, you will find an overview of the data displayed in the journal:

	DISPLAY	DESCRIPTION
AVERAGE VALUES	**AVG TIME**	Displays the average values for the workout
	AVG DISTANCE	
	AVG CALORIES	
	AVG PACE	
	AVG INCLINE	
	AVG METRES	
	AVG STEPS	
	AVG SPEED	
	AVG PULSE	
TOTAL TIME		Displays the total workout time

TOTAL DISTANCE	Displays the total distance
TOTAL CALORIES	Displays the calories burned
MATRIX	Displays the training values in a bar chart
YEAR	Provides an overview of your training year
MONTH	Displays the training values in a bar chart
WEEK	Provides an overview of your training year

ⓘ **NOTICE**
In the respective views, the average values for the selected period (week–month–year) are displayed.

1. To return to the home area, tap ←.

→ ***You are in the home area.***

3.10 Mirroring

Mirror your device screen to the console.

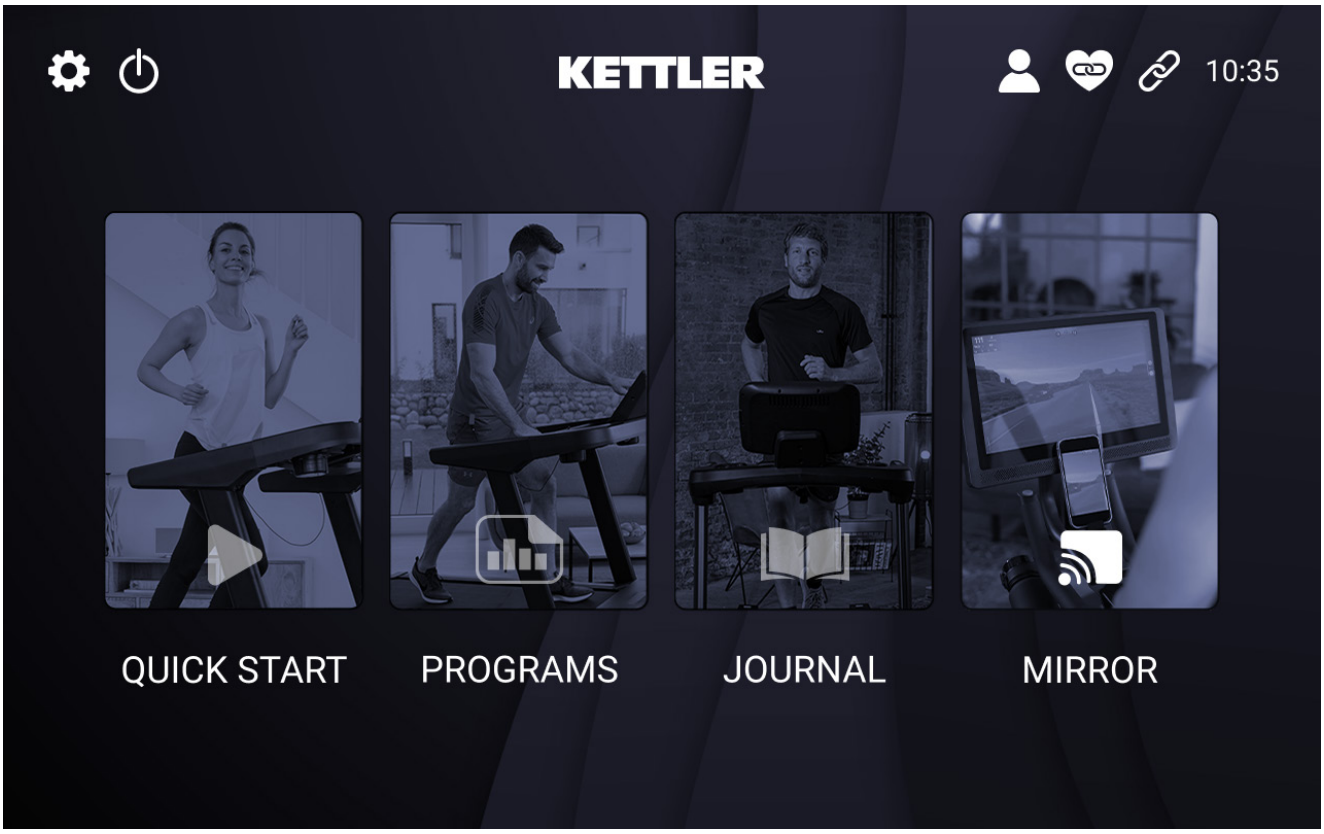

► **CAUTION**
Please note that some apps do not support screen mirroring. If you experience issues, please contact the app provider.

1. Tap .

ⓘ **NOTICE**
Please follow the instructions for your iOS or Android device.

2. Once your device is connected, tap .

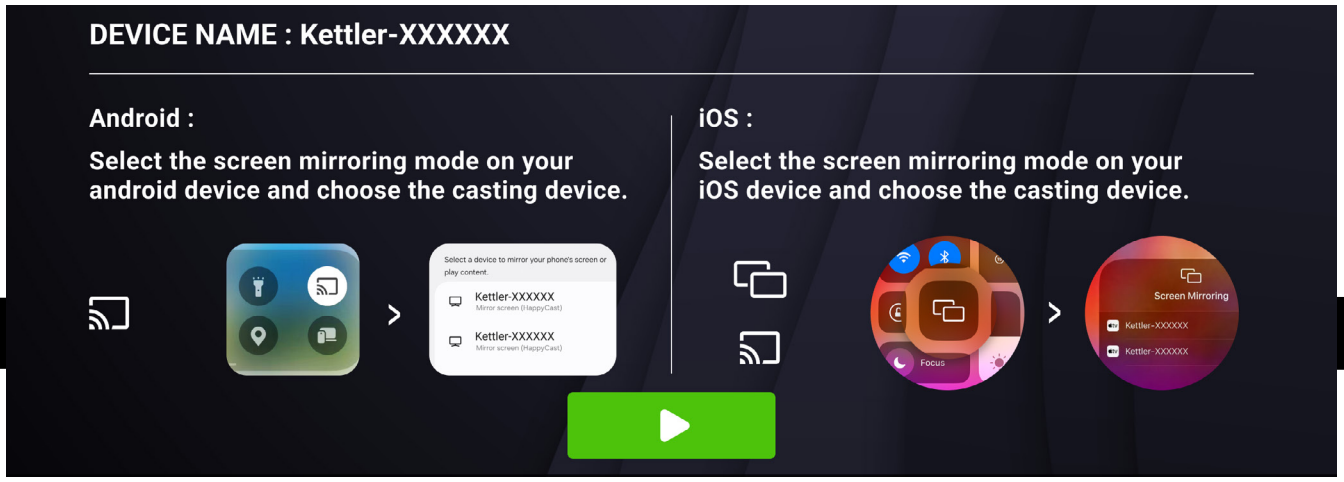

The workout starts.

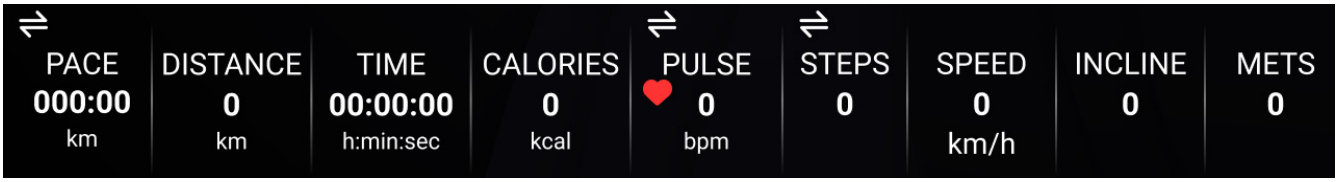

3. Tap ⇄ to switch between the training displays.
4. To display the training data, tap ▥.
5. To return to the mirrored screen, tap ▭.

ⓘ **NOTICE**
To stop screen mirroring, go to the settings of your device.

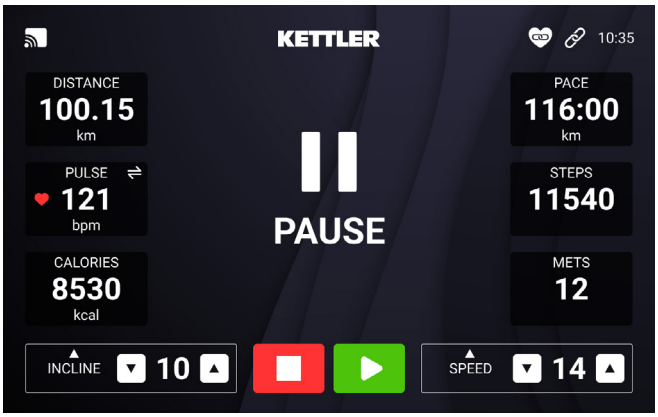

6. Tap ❚❚ to pause the programme.
7. Tap ▶ to resume the programme.

7.1. Tap ■ in pause mode to end the programme.

After completing the workout, a summary of your training data will be displayed. Refer to the chapter ***Training Summary****.*

8. Return to the home area with ⌂.

→ ***You are now in the home area.***

3.11 USB-C Port

This console features a USB-C port that you can use to charge your device.

ⓘ **NOTICE**

+ Charge your device via the console using a USB-C cable.
+ A USB-C cable is not included in the scope of delivery.

3.12 Key Configuration

You have the option to assign custom values to the keys.

***Prerequisite**: You must not be in a training session.*

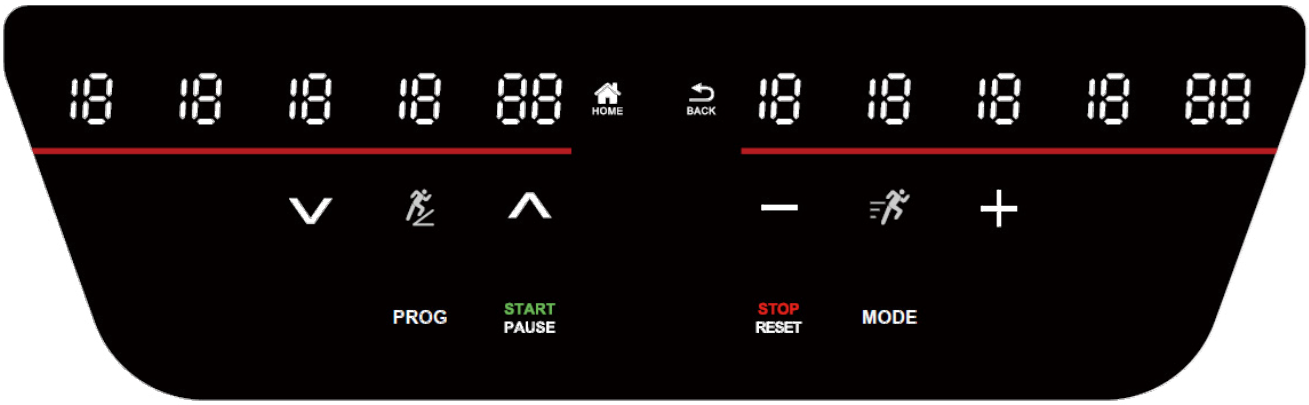

1. Press and hold a number in the highlighted area.

After a beep, the number will start flashing.

2. To adjust the value, press the incline or speed buttons –/+.
3. To save the value, press and hold the adjusted number.

The number is saved. Repeat the process to adjust additional key values.

4.1 General Instructions

When training, it is important to perform the exercises correctly in order to avoid injuries and achieve the desired training effect. Make sure you use the correct technique and train at an appropriate intensity level. Always consult an expert such as a trainer or doctor if you are unsure or have health problems. Always start your training with a low load and increase it evenly and gently.
End your training with a cool-down phase. If you have any questions or uncertainties, contact your doctor.

4.1.1 Training clothes

During training, wear appropriate sports clothing that is comfortable and breathable. Avoid clothing that restricts you or is uncomfortable. Make sure that your shoes are suitable and offer you sufficient support. In addition, always carry a towel with you to wipe away sweat and keep the equipment clean.

4.1.2 Warming up and stretching

It is important to warm up and stretch properly before training to avoid injury and improve performance. Stretching helps to loosen muscles and improve flexibility. Be sure to incorporate a short stretching routine before each workout.

Warm-up exercise:

1. Stand upright with your feet about shoulder-width apart.
2. Start with gentle arm circles by slowly moving your arms forwards in small circles in a controlled manner.
3. Perform arm circles backwards to loosen your shoulders and arms.
4. Do squats by slowly squatting down and then straightening up again. Make sure that your knees do not extend beyond your toes.

⚠ **CAUTION**
Do not exercise with sore muscles or take it easy on the affected muscles, as this can lead to injuries.

4.1.3 Medication

If you regularly take medication and want to exercise, it is important to be aware of possible side effects. Ask your doctor whether your medication affects your workout.

4.1.4 Used muscle groups

Running uses the following muscle groups:

+ Gluteal muscle
+ Leg muscles

Make sure you keep your back straight during training. Do not hunch over and do not arch your back.

4.1.5 Exercise frequency

Regular exercise is crucial to making progress and staying healthy in the long term. Continuous exercise can strengthen muscles, improve endurance and enhance overall well-being. Remember that even small workouts can be done regularly to achieve long-term results.

Training with heart rate orientation
Heart rate orientation guarantees an extremely effective and healthy training. Through your age and the following table, you can quickly and easily read and determine the optimal pulse for your training. An acoustic alarm will sound if your heart rate exceeds the set target heart rate. Which target heart rate is important for which training goal can be found out in the following.

Fat burning (weight management): The main goal here is to burn deposits of fat. In order to achieve this training goal, a low training intensity (approximately 55% of the maximum heart rate) and a longer training period are required.

Cardiovascular training (cardio training): The primary goal is to increase stamina and fitness through an improved provision of oxygen through the cardiovascular system. In order to achieve this training goal, medium intensity (approximately 75% of the maximum heart rate) with a medium training period is required.

Anaerobic (maximum) load training: The main goal of maximum load training is to improve recovery after short, intense loads in order to be able to quickly return to the aerobic zone. In order to achieve this training goal, a high intensity (approximately 90% of the maximum heart rate) with short, intense load is required, which is followed by a recovery phase in order to prevent muscle fatigue.

Example:
For a 45-year-old man, the maximum heart rate is 175 (220 - 45 = 175).

+ The fat burning target zone (55%) is at approximately 96 beats/min. = (220 - age) x 0.55.
+ The cardio target zone (75%) is at approximately 131 beats/min. = (220 - age) x 0.75.
+ The maximum heart rate for an anaerobic load training (90%) is at approximately 157 beats/min. = (220 - age) x 0.9.

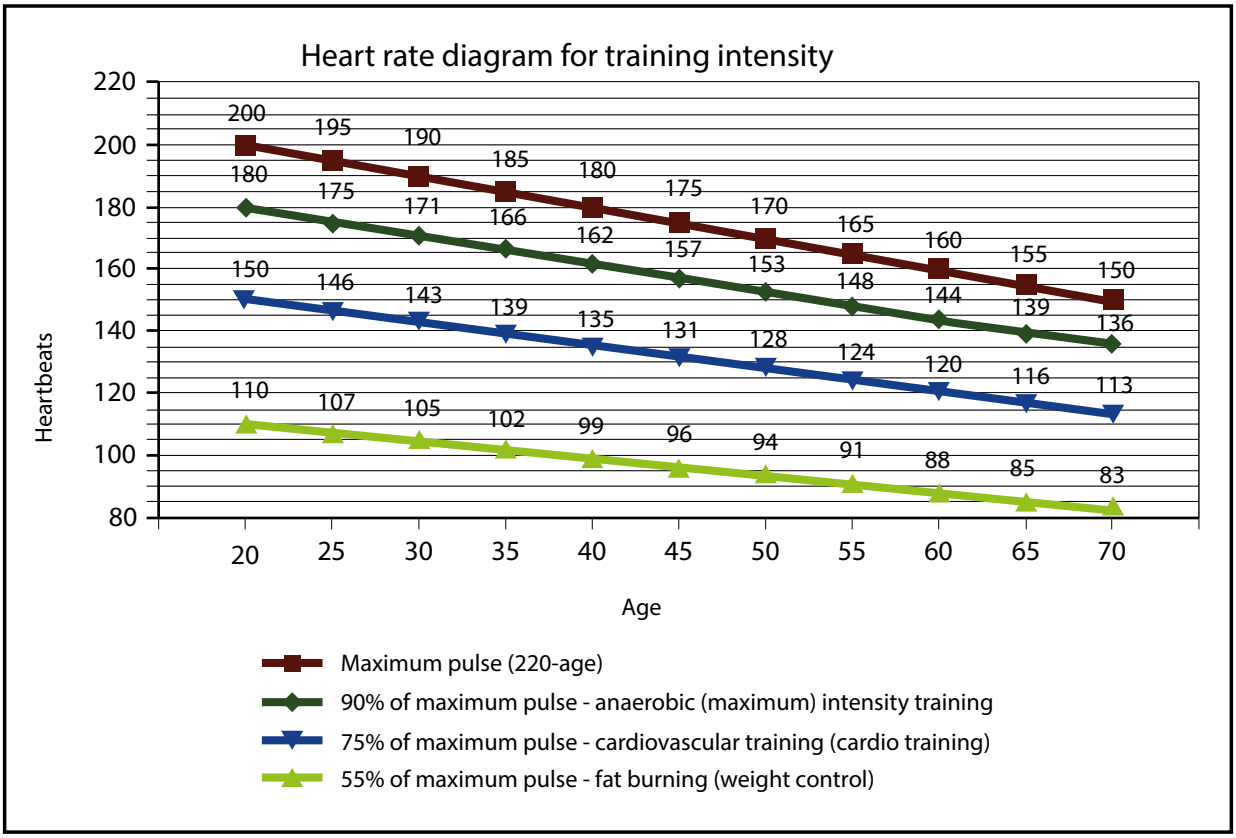

4.2 Workout journal

(Copy template)

Date | Distance | Time (min.) | Resistance level | Training weight | Ø Pulse | Calories burnt | I feel ... | Body weight

4.3 Wireless Connection and Fitness Apps

This console is equipped with a wireless interface. Please take note that your mobile device needs to be compatible with the wireless interface of the treadmill.

To use training apps you will have to activate the wireless connection function on your mobile device (tablet or smart phone) and start the fitness app. Select your fitness equipment. Please follow the instructions given in the app. You will find the name of your fitness euqipment on a small sticker on the back of the console.

You will find the fitness apps in the app stores of Google or Apple. There you will find the apps "Kinomap" or "Zwift". Please note that these apps are produced by an external manufacturer. Fitshop does not take any responsibility regarding the availability, functionality or contents of these programmes.

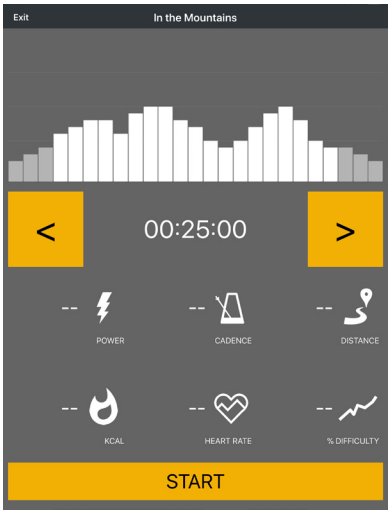

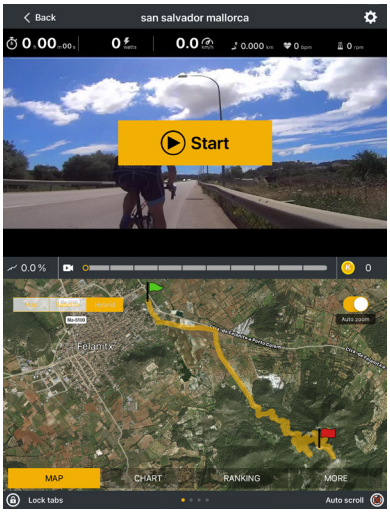

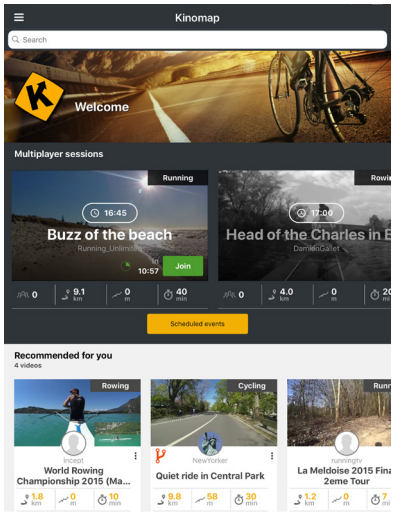

Example: Kinomap

5.1 General Instructions

⚠ **WARNING**

+ The storage location should be chosen so that improper use by third parties or children can be prevented.
+ If your equipment does not have transportation wheels, the equipment must be disassembled before transportation.

► **ATTENTION**

+ Make sure that the equipment is protected from moisture, dust and dirt in the selected storage location. The storage location should be dry and well ventilated and have a constant ambient temperature between 10°C and 35°C.

5.2 Transportation Wheels

► **ATTENTION**

If you want to transport your equipment over particularly sensitive and soft floor coverings, such as parquet, planks or laminate, lay out the transport route with cardboard or similar to avoid possible floor damage.

1. Stand behind the equipment and lift it until the weight is transferred to the transportation wheels. After that, you easily can move the equipment to a new position. For long transport distances the equipment should be disassembled and safely packed.
2. Select the new location by following the instructions in the section 1.5 of this manual.

5.3 Folding Mechanism

⚠ **WARNING**

+ The treadmill is equipped with high-pressure shock absorbers that can cause the treadmill to suddenly open if handled incorrectly. For more information, refer to the section 2.1 of this manual.
+ Do not lift the treadmill by the running mat or the rear transporting wheels. These parts do not lock and are difficult to grab.

ⓘ **NOTICE**

The treadmill is foldable and thus saves space when it is stored. It also makes it easier to transport.

5.3.1 Folding Up the Treadmill

⚠ **WARNING**

+ Do not connect the equipment to the power supply when it is folded up. Try not to operate the equipment when it is folded up.
+ The running surface must have come to a complete stop before folding.

⚠ **CAUTION**

+ Do not lean on the equipment when it is folded and do not place anything on top of it that may make the equipment unstable or fall down.

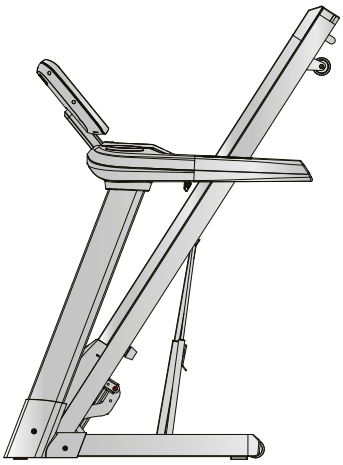

► **ATTENTION**

+ Make sure that nothing is standing next to or on top of the treadmill that can be spilled or thrown or that makes it impossible to fold the treadmill.

1. Turn off the on/off switch and remove the plug from the outlet.
2. Use both hands to grab the supportive bar directly under the rear part of the running mat so that you have a stable lifting point.
3. Make sure that the hydraulic brake is correctly locked and tilt the treadmill forward.
4. Make sure that you are standing safely and make sure that the locking mechanism is secure by pulling the equipment backwards and it does not move.

5.3.2 Unfolding the Treadmill

► **ATTENTION**

+ Make sure that nothing is standing next to or on top of the treadmill that can be spilled or thrown or that makes it impossible to unfold the treadmill.

1. Stand behind the treadmill and push the device slightly forward towards the display.
2. To release the hydraulic brake lock, use your left foot to push the upper part of the hydraulic brake slightly forward until the lock releases and the treadmill can be pulled back.
3. Keep holding the treadmill.

The hydraulic brake lowers itself gently downwards.

4. Once the treadmill has lowered ⅔, you can let go of the treadmill.

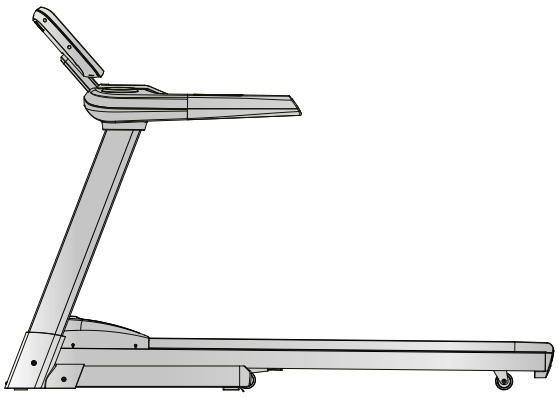

6.1 General Instructions

⚠ **WARNING**

+ Do not make any improper changes to the equipment.

⚠ **CAUTION**

+ Damaged or worn components may affect your safety and the life of the equipment. Therefore, immediately replace damaged or worn components. In such a case, contact the contract partner. The equipment must not be used until it has been repaired. If necessary, use only original spare parts.

► **ATTENTION**

+ In addition to the instructions and recommendations for maintenance and care given here, additional service and/or repair work may be necessary; this must only be carried out by authorised service technicians.

6.2 Faults and Fault Diagnosis

The equipment undergoes regular quality controls during production. Nevertheless, faults or malfunctions may occur. Frequently, individual parts are responsible for these disturbances, an exchange is usually sufficient. Please refer to the following overview for the most common errors and how to correct them. If the equipment still does not function properly, contact your contract partner.

Fault	Cause	Solution
Console is not responding	Safety key missing or not inserted correctly	Check whether Safety Key is inserted and insert if necessary
Running mat slanting	Running mat not centered	Adjust the running mat according to the instructions
Grinding noises		
Running mat slips through/stops	Tape tension/lubrication not correct	Check belt tension/lubrication according to instructions
Display is blank/is not working	+ Interrupted power connection + Loose cabel connections	+ Power switch to on + Check whether Safety Key is plugged in + Check cable connections
No pulse display	+ Sources of interference in the room + unsuitable chest strap + Wrong position of chest strap + Chest strap defective or battery empty + Pulse display defective	+ Eliminate sources of interference (e.g. mobile phone, WLAN, lawn mower and vacuum cleaner robot, etc. ...) + Use a suitable chest strap (see RECOMMENDED ACCESSORIES). + Reposition chest strap and/or moisten electrodes + Changing batteries + Check if pulse display by hand pulse possible

Wi-Fi cannot be connected	+ Incorrect password + Special characters in the password + Wi-Fi frequency not suitable	+ Change Wi-Fi password. + Establish Internet connection via a hotspot. + The date, time and time zone must be set correctly.

6.3 Error Codes and Troubleshooting

The electronics of the equipment continuously carries out tests. In case of deviations, an error code appears on the display and normal operation is stopped for your safety.

Please contact the contract partner for technical support.

6.4 Care and Maintenance

The most important maintenance measure is the care of the running mat. This includes adjustment, re tensioning and lubrication of the running mat. Damage resulting from insufficient or neglected care is not covered by the warranty. You should therefore carry out maintenance checks at regular intervals. Be very careful when adjusting and tightening the running mat, as a strong over voltage or under voltage can cause damage to the equipment. The running mat is adjusted at the factory according to the regulations before delivery. However, it may happen that the running mat slips during transport.

By scanning the QR-code with the camera function or QR-code scanner app of your smartphone/tablet, a video on general maintenance of a treadmill opens on YouTube. The video serves to illustrate the maintenance points described in this manual.

Please note that the video may not be available in your language or with appropriate subtitles.

If you cannot scan QR-codes, you can access all Fitshop videos on YouTube by first opening YouTube and entering "Fitshop" in the search field.

6.4.1 Adjusting the Running Mat

During training, the running mat should run as centrally and straight as possible. The alignment of the running mat can change depending on the stress and load. Another reason can be the positioning of the equipment on an uneven surface.

⚠ **CAUTION**
During the following maintenance nobody must be on the treadmill!

1. Let the treadmill run at a speed of 5 km/h.
2. If the running mat deviates to the left, turn the left adjusting screw at the rear end of the device max. one ¼ turn clockwise and the right adjusting screw max. one ¼ turn anticlockwise.
3. If the running mat deviates to the right, turn the right adjusting screw at the rear end of the device max. ¼ turn clockwise and the left adjusting screw max. ¼ turn anticlockwise.
4. Then observe the mat for about 30 seconds, as the change is not immediately visible.
5. Repeat this procedure until the running mat is straight again. If the running mat cannot be adjusted, please contact your contract partner.

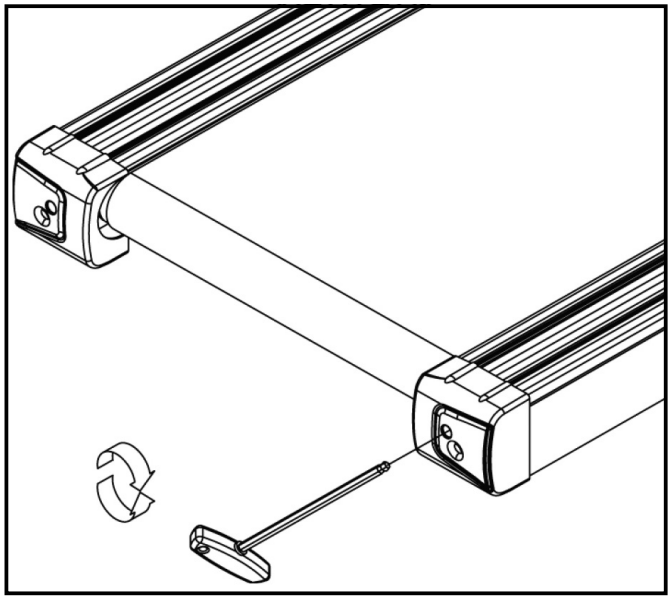

6.4.2 Re-tensioning the Running Mat

If the running mat slips over the rollers during operation (if this is the case, there is a noticeable jerk during running), the running mat must be re tightened.

In most cases, the slipping is caused by stretching of the mat through use. This is perfectly normal.

ⓘ **NOTICE**
Re-tensioning is carried out using the same adjusting screws that are used for adjustment.

1. Let the treadmill run at a speed of 5km/h.
2. Turn the left and right adjusting screws directly one after the other, max. one ¼ turn clockwise.
3. Then check whether the running mat continues to slip. If this is the case, you must perform the described procedure again.

6.4.3 Lubricating the Running Mat

If the running mat is not sufficiently lubricated, friction increases significantly and this leads to heavy wear of the endless belt, running plate, motor and circuit board. If you feel an increased friction of the running mat, this is an indication that you should lubricate the mat. However, lubrication should be carried out at least every 3 months or every 50 operating hours. Whichever case comes first.

ⓘ **NOTICE**
If your treadmill is equipped with a folding mechanism, you can also lubricate it when it is folded.

1. Raise the running mat slightly.
2. Apply some silicone oil or silicone spray to the entire deck and distribute evenly.
3. Continue turning the belt by hand so that the entire surface between the endless belt and the running plate is lubricated.
4. Wipe off the excess silicone oil or silicone spray.

ⓘ **NOTICE**
This maintenance must also be carried out after prolonged non-use of the equipment.

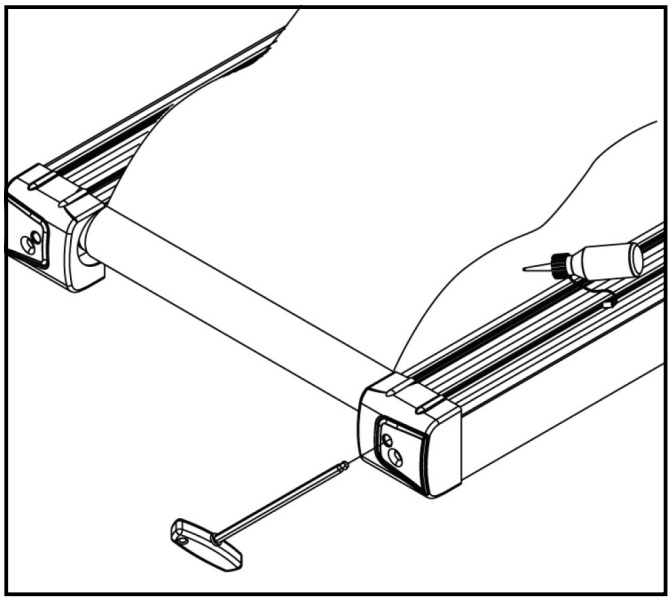

6.5 Maintenance and Inspection Calendar

To avoid damage from body sweat, the equipment must be cleaned with a damp towel (no solvents!) after each training session.

The following routine tasks must be performed at the specified intervals:

Part	Weekly	Monthly	Quarterly
Display console	C	I	
Tension of the running mat			I
Lubrication of the running mat			I
Plastic covers	C	I	
Screws and cable connections			I
Legend: C = clean; I = inspect			

7 DISPOSAL

At the end of its operational life, this equipment cannot be disposed of in normal household waste. Instead, it must be disposed of via an electricals recycling centre. Further information can be obtained from your local authority's recycling service.

The materials can be recycled as per their symbols. Through the reuse, recycling of materials or other forms of recovery of old equipment, you make an important contribution to the protection of the environment.

8 RECOMMENDED ACCESSORIES

To make your training experience even more efficient and pleasant, we recommend that you add suiting accessories to your fitness equipment. For elliptical cross trainers this could for example be a **floor mat**, which makes your fitness equipment stand more securely and also protects the floor from sweat or **silicone spray** to keep moving parts in good shape.

If you have purchased a fitness machine with pulse training and want to train your heart rate, we strongly recommend that you use a compatible **chest strap**, as this ensures optimum transmission of the heart rate.

Our range of accessories offers the highest quality and makes training even better. If you would like to find out more about compatible accessories, please go to the detail page of the product in our webshop (the easiest way is to enter the article number in the search field above) and go to the recommended accessories on this page. Of course, you can also contact our customer service: by telephone, e-mail, in one of our branches or via our social media channels. We will be happy to advise you!

floor mat

chest strap

chest strap contact gel

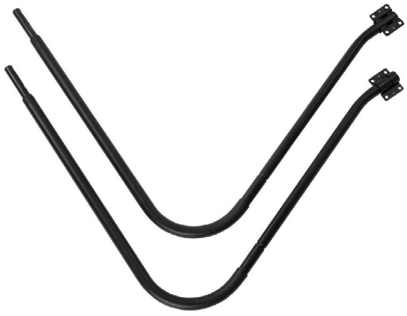

handrails

silicone spray

9.1 Serial Number and Model Name

In order to provide you with the best possible service, please have the model name, article number, serial number, exploded drawing and parts list ready. The corresponding contact options can be found in chapter 11 of this operating manual.

ⓘ **NOTICE**
The serial number of your equipment is unique. It's located on a white sticker.

Enter the serial number in the appropriate field.

Serial number:

Brand / Category:

Kettler / treadmill

Model Name:

Alpha Run 800

Article Number:

K-TM2025-100

9.2 Parts List

No.	Name	Supplier Parts No.	Specification	Qty.
A01	Base frame	3.83551D.100.001.000		1
A02	Main frame	3.83551D.200.001.000		1
A03	Incline bracket	3.11251B.300.001.000		1
A04	Console bracket	3.83551D.320.001.000		1
A05	Left upright tube	3.83551D.381.001.000		1
A06	Right upright tube	3.83551D.381.002.000		1
A07	Console support bracket A	3.83551B.320.002.000		1
A08	Console rotating bracket	3.83551B.320.003.000		1
B01	Front roller	1.03.02.00.11251B.505		1
B02	Back roller	1.03.03.00.11251B.505		1
B03	Left pulse plate	1.03.99.00.000101.000		2
B04	Right pulse plate	1.03.99.00.000102.000		2
B05	Cylinder	1.03.01.00.83551B.509		1
B06	Step shaft sleeve	1.03.05.00.000094.505		2
B07	Grounding copper sheet	1.03.99.00.000265.000		1
B08	Safety key spring piece	1.02.10642B.3821.000		2
B09	Wrench w/screw driver	1.03.13.05.000001.505		1
B10	5# Allen wrench	1.03.13.04.000001.505		1
B11	6# Allen wrench	1.03.13.06.000001.505		1
B12	Wire rope	1.03.99.00.000067.000		1
B13	Sprocket retaining pin	1.03.10.00.000049.505		2
B14	Brushless motor pressing board	1.02.83551B.4021.505		2
B15	Wheel fixing board	1.02.83551B.3228.000		4
B16	Panel rotating plate	1.02.80752B.3226.000		2
B17	pressure spring 1	1.03.12.00.000010.505		4
B18	Sleeve	1.03.05.00.000044.505		2
B19	Hook	1.03.99.00.000015.505		2
C01	Motor top cover	1.05.03.01.83551B.000		1
C02	Motor top cover base	1.05.99.00.001494.000		7
C03	Side rail	1.05.06.00.000264.000		2
C04	Running belt	1.05.05.00.83551D.401		1
C05	Motor belt	1.05.07.00.J48371.401		1
C06	EVA pad	1.05.99.00.000873.401		2

C07	Console top cover	1.05.02.02.83551B.000		1
C08	Console bottom cover	1.05.02.03.83551B.000		1
C09	Left handle bar	1.05.11.00.83551B.000		1
C10	Right handle bar	1.05.11.01.83551B.000		1
C11	Button	1.05.99.00.001499.000		1
C12	Console support top cover	1.05.02.09.83551B.000		1
C13	Console support bottom cover	1.05.02.10.83551B.000		1
C14	Wheel	1.05.01.10.000069.000		2
C15	Holder pad	1.05.99.00.001498.401		1
C16	Water bottle clamp block	1.05.99.00.001502.000		4
C17	Water bottle EVA	1.05.99.00.001505.401		2
C18	Rear cover	1.05.99.00.000557.000		1
C19	Left rear cover	1.05.04.03.83551D.000		1
C20	Right rear cover	1.05.04.04.83551D.000		1
C21	Safety key	1.05.99.00.000580.403		1
C22	Motor bottom cover	1.05.03.02.11251B.000		1
C23	Rear cover hole plug	1.05.99.00.000535.000		2
C24	Middle cushion	1.05.01.06.000041.512		4
C25	Transport wheel	1.05.01.10.000001.401		2
C26	Adjustable wheel	1.05.01.10.000002.401		2
C27	Plastic gasket	1.05.99.00.000002.401		2
C28	Ring shape protective plug	1.05.01.03.000001.401		2
C29	Foot pad	1.05.01.12.000001.401		4
C30	Cylindrical cushion	1.05.01.06.000031.401		2
C31	Adjustable foot pad	1.05.01.12.000004.401		2
C32	Black cushion	1.05.01.06.000020.401		4
C33	Pipe clamp	1.05.99.00.000475.404		2
C34	Square tube plug	1.05.01.02.000019.401		1
C35	EVA pad	1.05.99.00.000315.401		1
C36	Console small cover	1.05.02.99.000042.000		1
C37	Safety key base	1.05.99.00.000915.419		1
D01	Nut	1.04.01.03.060000.512	M6	5
D02	Nut	1.04.01.03.080000.512	M8	10
D03	Nut	1.04.01.03.100000.512	M10	7
D04	Bolt	1.04.02.01.109063.512	M10*90	1

D05	Bolt	1.04.02.01.104563.512	M10*45	1
D06	Bolt	1.04.02.01.103062.512	M10*30	2
D07	Bolt	1.04.02.01.101500.512	M10*12	14
D08	Bolt	1.04.02.01.084563.512	M8*45	1
D09	Bolt	1.04.02.01.081500.512	M8*15	6
D10	Bolt	1.04.02.01.084003.512	M8*40	4
D11	Bolt	1.04.02.02.066000.512	M6*60	1
D12	Bolt	1.04.02.02.065500.512	M6*55	2
D13	Bolt	1.04.02.03.064000.512	M6*40	4
D14	Bolt	1.04.02.02.081500.512	M8*15	4
D15	Bolt	1.04.04.98.103003.512	M10*30	2
D16	Bolt	1.04.02.04.051290.512	M5*12	14
D17	Screw	1.04.02.09.2A0800.512	ST2.9*8	2
D19	Screw	1.04.02.06.4A1290.512	ST4.2*12	14
D20	Screw	1.04.02.05.2C0800.512	ST2.2*8	4
D21	Screw	1.04.02.09.4A1200.512	ST4.2*12	9
D22	Screw	1.04.02.05.4A1200.512	ST4.2*12	64
D23	Screw	1.04.02.05.2A0800.502	ST2.9*8	33
D24	Locked washer	1.04.03.01.100000.512	10	8
D25	Locked washer	1.04.03.01.060000.512	6	3
D26	Bolt	1.04.02.01.083002.512	M8*30	1
D27	Bolt	1.04.02.04.051290.502	M5*12	2
D28	Screw	1.04.02.05.4A4000.512	ST4.2*40	2
D29	Screw	1.04.02.05.200690.512	ST2.0*6	4
D30	Locked washer	1.04.03.01.080000.512	8	6
D31	Big flat washer	1.04.03.04.061210.512	φ6*φ12*1.0	4
D32	Big washer	1.04.03.04.102620.512	φ10*φ26*2.0	8
D33	Spring washer	1.04.03.02.050000.502	5	2
D34	Locked washer	1.04.03.01.050000.502	5	2
D35	Bolt	1.04.02.02.061500.512	M6*15	6
D36	Bolt	1.04.02.02.109564.512	M10*95	1
D37	Flat washer	1.04.03.03.100000.512	10	10
D38	Spring washer	1.04.03.02.100000.512	10	8
E01	Running board	1.05.99.00.83551D.401		1
E02	Motor	1.06.06.06.852071.000		1

E03	Incline motor	1.06.06.03.210900.000		1
E04	Square switch button	1.06.01.01.000002.401		1
E05	Power socket	1.06.99.99.000001.000		1
E06	Overload protector	1.06.99.04.000001.010		1
E07	Magnet core	1.06.99.02.000004.401		1
E08	Power wire	1.06.05.01.3B0500.001		1
E09	AC single wire	1.06.05.02.120026.402		1
E10	AC single wire	1.06.05.02.135025.402		2
E11	AC single wire	1.06.05.02.135025.406		2
E12	Grounding wire	1.06.05.04.135050.413		1
E13	Console	1.06.02.04.83551D.000		1
E14	Control board	1.06.03.01.83551D.000		1
E15	Button board	1.06.08.02.000050.000		1
E16	Button board top signal wire	1.06.04.99.580032.000		1
E17	Button board bottom signal wire	1.06.04.99.540047.000		1
E18	Console top signal wire	1.06.04.01.670036.000		1
E19	Console middle signal wire	1.06.04.02.8A2030.000		1
E20	Console bottom signal wire	1.06.04.03.875040.000		1
E21	Wireless charging module	1.06.07.07.000369.000		1
E22	Wireless charging connecting wire I	1.06.04.17.420040.000		1
E23	Wireless charging connecting wire II	1.06.04.17.290030.000		1
E24	Safety key wire	1.06.04.99.3150I0.000		1
E25	IPAD holder	1.02.83546B.3227.000		1
E26	Hand wheel connecting wire	1.06.04.99.385050.000		1
E27	Hand pulse connecting wire	1.06.04.99.000325.000		1
E28	Control board grounding wire	1.06.05.04.120001.000		1
E29	Console grounding wire	1.06.05.04.110052.000		1
E30	Left/right hand wheel	1.06.99.99.000171.000		1
F01	Grounding wire	1.06.05.04.135050.413		1
F02	Screw	1.04.02.06.4A1290.512		4
F03	AC single wire	1.06.05.02.135025.406		1
F04	Filter	1.06.99.08.000025.012		1
F05	Inductance	1.06.99.07.000022.012		1
HP	Hardware pack	1.08.99.EN.83551B.001		1
F	Lubrication oil	1.09.04.04.000003.000		1

9.3 Exploded Drawing

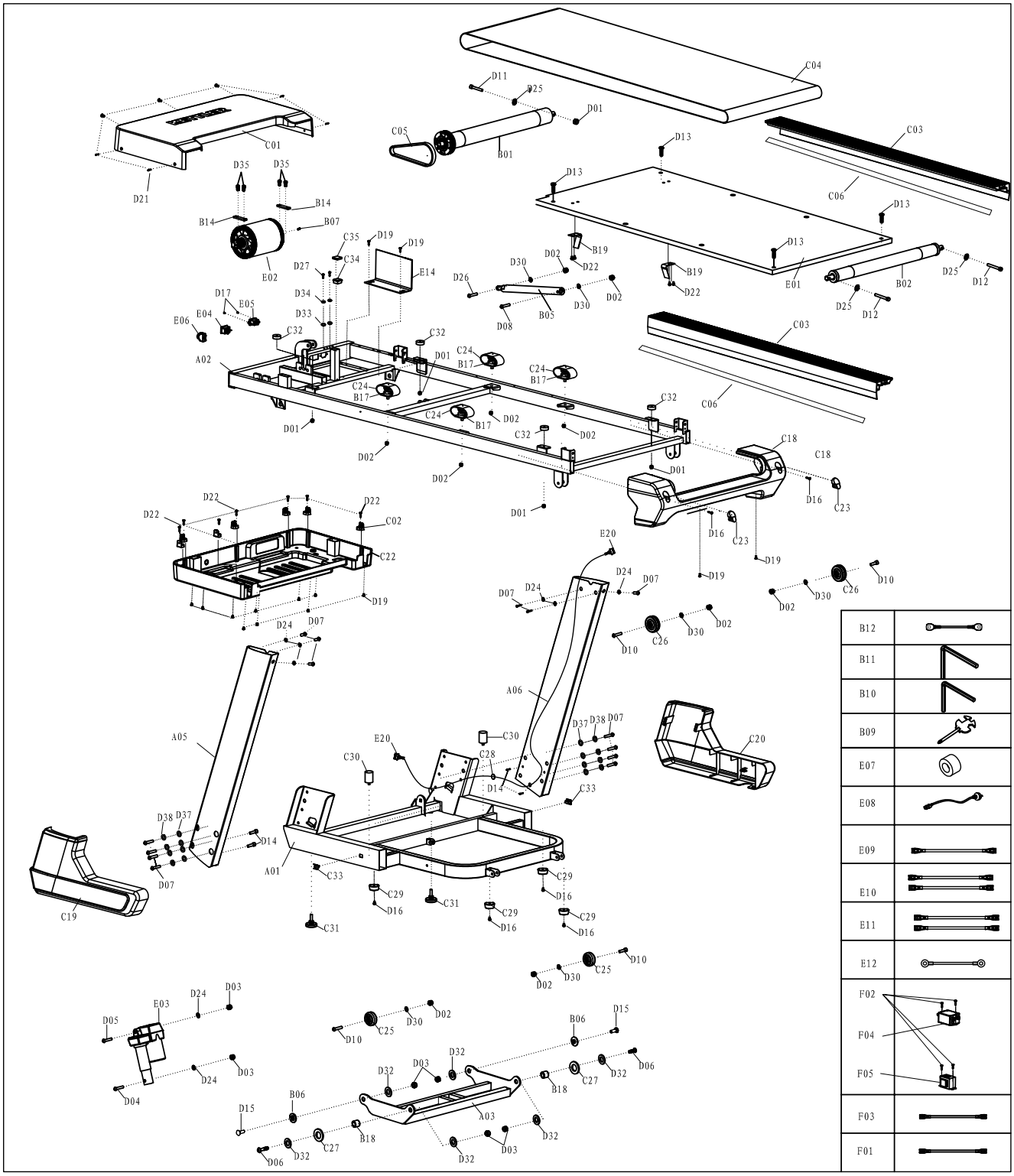

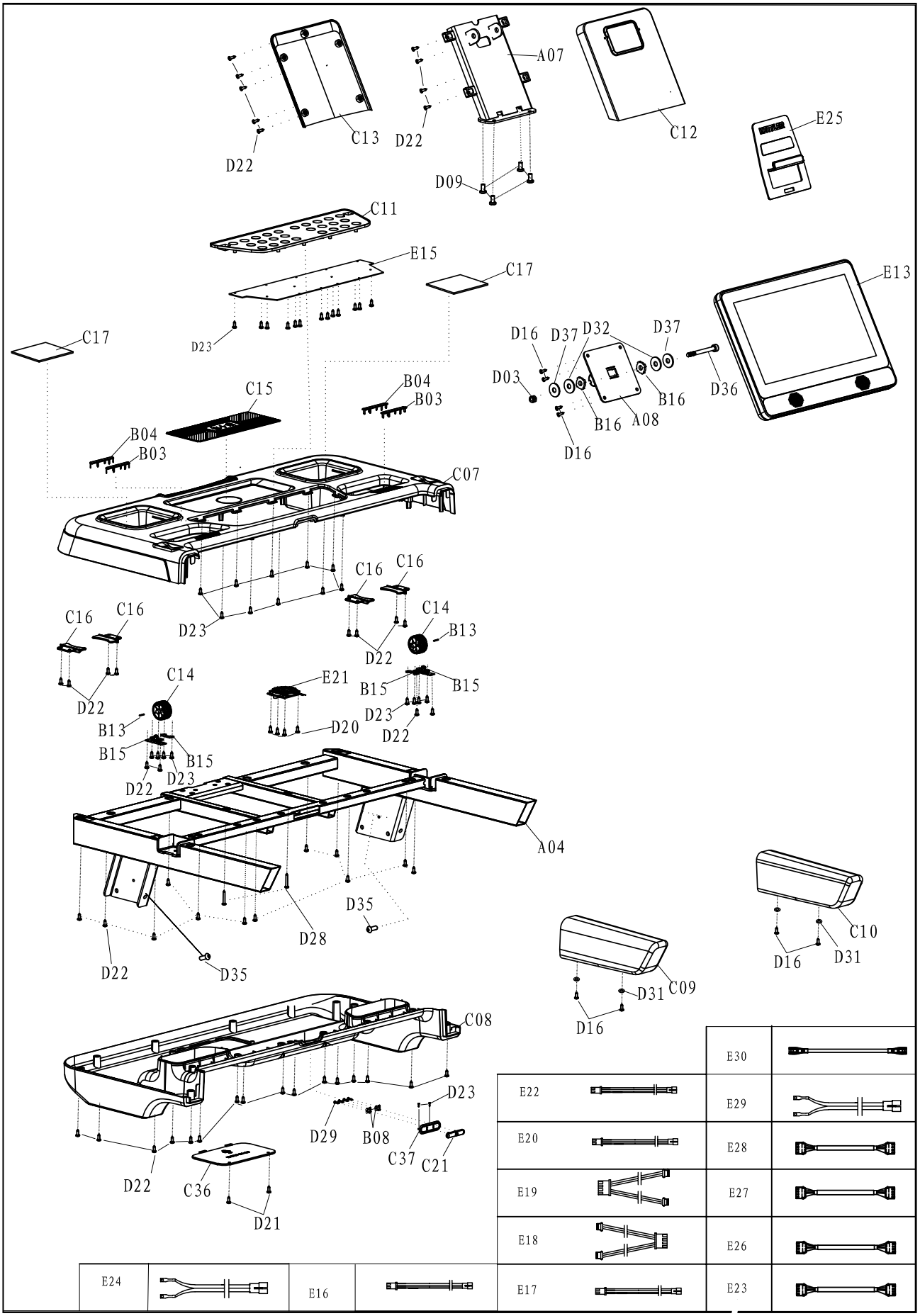
A07
C13
D22
D22
C12
E25
D09
C11
E15
C17
E13
C17
D23
D16
D37
D32
D37
D03
B16
D36
B16
A08
D16
C15
B04
B03
B04
B03
C07
C16
C16
C16
C16
C14
B13
D23
D22
D22
C14
E21
B15
B15
B13
D23
D20
D22
B15
B15
D22
D23
A04
D35
D28
D22
D35
C10
D16
D31
D31
C09
D16
C08
D23
D29
B08
C37
C21
D22
C36
D21
E30
E22
E29
E20
E28
E19
E27
E18
E26
E24
E16
E17
E23

10 WARRANTY

Products from Kettler® are subject to strict quality control. However, if a fitness equipment purchased from us does not work perfectly, we take it very seriously and ask you to contact our customer service as indicated. We are happy to help you by phone via our service hotline.

Error Descriptions
Your fitness equipment is developed for long-term, high-quality training. However, should a problem arise, please first read the operating instructions. For further assistance, please contact your contract partner or call our service hotline. To ensure your problem is solved as quickly as possible, please describe the defect as exactly as possible.

In addition to the statutory warranty, we provide a warranty for every fitness equipment purchased from us according to the following provisions.

Your statutory rights are not affected.

Warrantee
The warrantee is the first/original buyer and/or any person who received a newly purchased product as a gift from the original buyer.

Warranty period
The warranty periods, shown on our web shop, begin on delivery of the fitness equipment. The respective warranty periods for your equipment can be found on its product website.

Repair Costs
According to our choice, there will either be a repair, a replacement of individual damaged parts or a complete replacement. Spare parts, that have to be mounted while assembling the equipment, have to be replaced by the warrantee personally and are not a part of repair. After the expiration of the warranty period, the responsibility for parts costs, repair costs, installation costs and delivery costs lies with the warranty holder.

The terms of use are defined as follows:

- Home use: solely for private use in private households up to 3 hours per day
- Semi-professional use: up to 6 hours per day (e. g. rehabilitation centres, hotels, clubs, company gyms)
- Professional use: more than 6 hours per day (e. g. commercial gyms)

Warranty Service
Within the warranty period, equipment which develops faults as a result of material or manufacturing defects, will be repaired or replaced at our discretion. Ownership of equipment or parts of equipment which have been replaced is transferred to us. The warranty period is not extended nor does a new warranty period begin following repair or replacement under the warranty.

Warranty Conditions
For the warranty to be valid, the following steps must be taken:

Please contact our customer service by email or phone. If the product under warranty has to be sent in for repair, the seller bears costs. After expiry of the warranty, the buyer bears the costs of transport and insurance. If the fault is covered by our warranty, you will receive a new or repaired equipment in return.

Warranty claims are invalid in case of damage resulting from:

+ misuse or improper handling
+ environmental influences (moisture, heat, electrical surge, dust, etc.)
+ failure to follow the current safety measures for the equipment
+ failure to follow the operating instructions
+ use of force (e. g. hitting, kicking, falling)
+ interventions which were not carried out by one of our authorized service centres
+ unauthorised repair attempts

Proof of Purchase and Serial Number
Please make sure that you are able to provide the appropriate receipt when claiming on your warranty. So that we can clearly identify the model of your equipment, and for the purposes of our quality control, you will need to give the serial number of your equipment, when contacting the service team. Where possible please have your serial number and your customer number ready when you call our service hotline. It will help us to deal with your request swiftly.

If you cannot find the serial number on your fitness equipment, our service team is at your disposal to offer further information.

Service outside of the Warranty Period
We are also happy to issue an individual cost estimate if there is a problem with your fitness equipment after the warranty has expired, or in cases which do not fall under the terms of the warranty, e. g. normal wear and tear. Please contact our customer service team to find a quick and cost-effective solution to your problem. In such a case you will be responsible for the delivery costs.

Communication
Many problems can be solved just by speaking to us as your specialist supplier. We know how important it is to you as a user of the fitness equipment to have problems solved quickly and simply, so you can enjoy working out with minimal interruption. For that reason, we also want to resolve your queries quickly and in a straightforward manner. Thus, please always keep your customer number and the serial number of the faulty equipment handy.

11 CONTACT

DE

TECHNIK

+49 4621 4210-900
+49 4621 4210-698
technik@fitshop.de
Öffnungszeiten entnehmen Sie unserer Homepage.

SERVICE

0800 20 20277 (kostenlos)
04621 4210 - 0
info@fitshop.de
Öffnungszeiten entnehmen Sie unserer Homepage: https://stg.fit/statita

DK

TEKNIK OG SERVICE

80 90 16 50
+49 4621 4210-945
info@fitshop.dk
Åbningstider kan findes på hjemmesiden: https://stg.fit/statit7

EN

CUSTOMER SUPPORT

00800 2020 2772
+494621 4210 944
service@fitshop.com
You can find the opening hours on our homepage: https://fsg.fit/en

FR

TECHNIQUE & SERVICE

+33 (0) 189 530984
+49 4621 42 10 933
info@fitshop.fr
Vous trouverez les heures d'ouverture sur notre site Internet: https://stg.fit/statit4

BE

TECHNIQUE & SERVICE

02 732 46 77
+49 4621 4210 933
info@fitshop.be
Vous trouverez les heures d'ouverture sur notre site Internet: https://stg.fit/statit8

ES

TECNOLOGÍA Y SERVICIOS

938 805 790
info@fitshop.es
Consulta nuestro horario de apertura en la página web: https://stg.fit/statit5

NL

TECHNISCHE DIENST & SERVICE

+31 172 619961
service@fitshop.nl
De openingstijden vindt u op onze homepage: https://stg.fit/statit3

INT

TECHNICAL SUPPORT & SERVICE

+49 4621 4210-944
service-int@fitshop.de
You can find the opening hours on our homepage: https://stg.fit/statita

PL

DZIAŁ TECHNICZNY I SERWIS

22 307 43 21
+49 4621 42 10-948
info@fitshop.pl
Godziny otwarcia można znaleźć na stronie głównej: https://stg.fit/statit6

AT

TECHNIK & SERVICE

0800 20 20277 (Freecall)
+49 4621 42 10-0
info@fitshop.at
Öffnungszeiten entnehmen Sie unserer Homepage: https://stg.fit/statitb

CH

TECHNIK & SERVICE

0800 202 027
+49 4621 42 10-0
info@fitshop.ch
Öffnungszeiten entnehmen Sie unserer Homepage: https://stg.fit/statit9

Please find a detailed overview including address and opening hours for all stores of the Fitshop Group in Germany and abroad on the following website:

www.fitshop.com/en/stores

KETTLER

WEBSHOP AND SOCIAL MEDIA

Since 2024 Kettler sports equipment is part of the Fitshop brand family, Europe's largest specialist retailer for home fitness equipment. Kettler equipment such as treadmills, cross trainers, and rowing machines have always played an important role in Fitshop's more than 40-year history. Kettler stands for the highest product quality, reliability, and tradition. Kettler sports equipment helps you lead an active and healthy life. They make exercise fun for young and old. As part of the Fitshop Group, Kettler Sport remains true to these values.

Visit us also on our social media platforms or our online shop!

FIT SHOP www.fitshop.com/kettler
www.kettlersport.com

www.facebook.com/fitshopgroup/

www.instagram.com/fitshopgroup/

www.linkedin.com/company/fitshop-gmbh

www.stg.fit/YouTube_DE

Kettler is part of the Fitshop Group.

Notes

KETTLER

ALPHA RUN 800