KETTLER

ASSEMBLY AND OPERATING INSTRUCTIONS

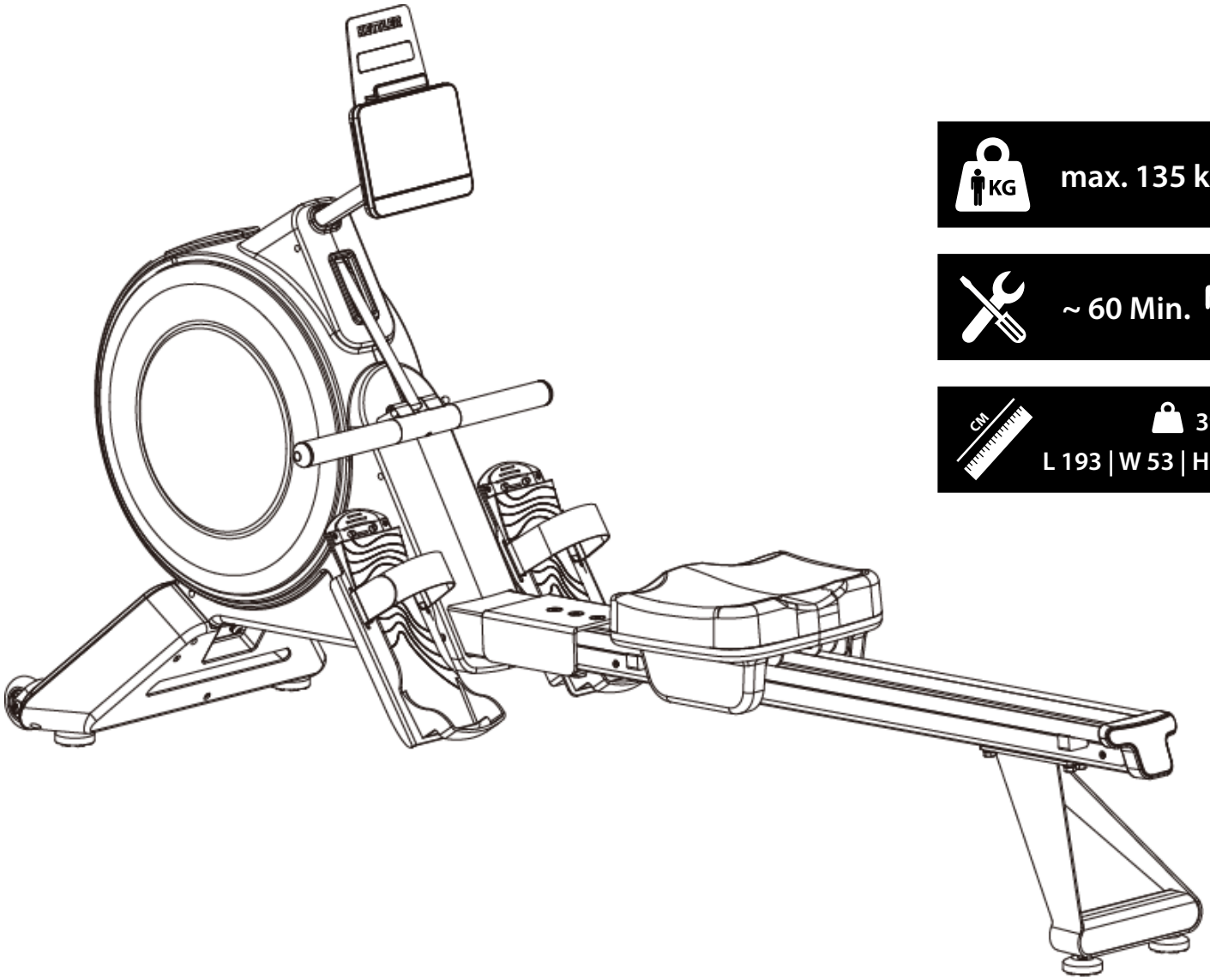

max. 135 kg

~ 60 Min.

39 kg
L 193 | W 53 | H 102

FSKRO2001100.01.04

Art. No. K-RO2001-100

COACH 400

Content

1	GENERAL INFORMATION	8
1.1	Technical Data	8
1.2	Technical Drawings	9
1.3	Personal Safety	10
1.4	Electrical Safety	11
1.5	Set-Up Place	12
2	ASSEMBLY	13
2.1	General Instructions	13
2.2	Scope of Delivery	14
2.3	Assembly	16
2.4	Adjustment of the Pedal up and Straps	22
3	OPERATING INSTRUCTIONS	23
3.1	Console Display	23
3.2	Button Function	25
3.3	Display Modes	26
3.4	Displayed Values	26
3.5	Training Programmes	27
3.5.1	Quick Start	27
3.5.2	Target Programmes	28
3.5.3	Interval Programmes	29
3.5.4	Game Mode	31
3.6	Activate the Wireless Connection	32
4	WORKOUT TIPS	33
4.1	General Instructions	33
4.1.1	Training clothes	33
4.1.2	Warming up and stretching	33
4.1.3	Medication	34
4.1.4	Used muscle groups	34
4.1.5	Exercise frequency	34
4.2	Workout journal	36
4.3	Wireless Connection and Fitness Apps	37
5	STORAGE AND TRANSPORT	38
5.1	General Instructions	38
6.2	Transportation Wheels	39

6 TROUBLESHOOTING, CARE AND MAINTENANCE 39
6.1 General Instructions 39
6.3 Faults and Fault Diagnosis 40
6.4 Error Codes and Troubleshooting 40
6.5 Maintenance and Inspection Calendar 41
7 DISPOSAL 41
8 RECOMMENDED ACCESSORIES 42
9 ORDERING SPARE PARTS 43
9.1 Serial Number and Model Name 43
9.2 Parts List 44
9.3 Exploded Drawing 47
10 WARRANTY 48
11 CONTACT 50

Dear customer,
Thank you for choosing a Kettler fitness device. Kettler Sport represents tradition, durability, and quality like no other home fitness brand. Classic home trainers such as the Golf have accompanied users for decades. At the same time, Kettler stands for innovation and continuously develops thoughtful solutions, particularly in usability and training comfort.
Kettler Sport provides everything you need for successful training at home: cardio and strength equipment, as well as a wide range of fitness accessories.

Further information can be found at www.fitshop.com/kettler.

Intended Use

The equipment may only be used for its intended purpose.

The equipment is only suitable for home use. The equipment is not suitable for semi-professional (e.g. hospitals, associations, hotels, schools, etc.) and commercial or professional use (e.g. fitness studios).

Legal Notice

Fitshop GmbH
Europe's No. 1 for home fitness

International Headquarters
Flensburger Straße 55
24837 Schleswig
Germany

Management:
Christian Grau
Sebastian Campmann
Dr. Bernhard Schenkel

No. HRB 1000 SL
Local Court Flensburg
European VAT Number: DE813211547

FITSHOP
Europe's No.1 for Home Fitness

ABOUT THIS MANUAL

Please carefully read the entire manual before installation and first use. The manual will help you to quickly set up the system and explains how to safely use it. Make sure that all persons exercising with the equipment (especially children and persons with physical, sensory, mental or motor disabilities) are informed about this manual and its contents in advance. In case of doubt, responsible persons must supervise the use of the equipment.

Due to ongoing changes and software optimisations, the manual may have to be updated. If you notice any discrepancies during assembly or use, please refer to the manual uploaded to the webshop. The latest manual is always available there.



This equipment has been manufactured according to the latest safety knowledge. As far as possible, potential safety hazards which could cause injury have been eliminated. Make sure to carefully follow the instructions and that all parts are securely in place. If required, read through the instructions again to correct any mistakes.

Training devices must be classified according to accuracy and use. Accuracy classes are only applicable to devices that display training data.

Accuracy classes

Class A: high accuracy.
Class B: medium accuracy.
Class C: low accuracy.

The use classes explain the intended use of the training device.

Use classes

Class S (studio): professional and/or commercial use.
These training devices are intended for the use in training rooms of facilities such as sports clubs, school facilities, hotels, clubs and studios whose access and supervision is specifically regulated by the owner (person with legal responsibility).

Class H (home use): use at home.
These stationary training devices are intended for the use in private homes where access to the training device is regulated by the owner (person with legal responsibility).

Please pay close attention to the safety and maintenance instructions given here. The contract partner cannot be held liable for damage to health, accidents or damage to the equipment when it is not used in accordance with these instructions.

The following safety instructions may appear in this manual:

► **ATTENTION**
This notice indicates potentially hazardous situations which, if not avoided, may result in property damage.

⚠ **CAUTION**
This notice indicates potentially hazardous situations which, if not avoided, may result in slight or minor injuries!

⚠ **WARNING**
This notice indicates potentially hazardous situations which, if not avoided, may result in death or serious injuries!

⚠ **DANGER**
This notice indicates potentially hazardous situations which, if not avoided, will result in death or serious injuries!

ⓘ **NOTICE**
This notice indicates further useful information.

Retain these instructions in a safe place for future reference, maintenance or when ordering replacement parts.

1.1 Technical Data

Weight and dimensions	
Item weight (gross, including packaging)	44.5 kg
Item weight (net, excluding packaging)	38.4 kg
Packaging dimensions of boxes (L x W x H)	114 cm x 32 cm x 74.5 cm
Set-up dimensions (L x W x H)	193.1 cm x 52.7 cm x 102.4 cm
Folding dimensions (L x W x H)	102.4 cm x 52.7 cm x 193.1 cm
Maximum load	
Maximum user weight	135 kg
Technical specifications	
Resistance system	Magnet brake system
Resistance levels	32
Dimensions of the rail (L)	110 cm
Power supply	Mains power (AC)
Console data	
Display	Time
	Time/500m
	KM
	Distance
	Calories
	Calories/Hour
	Interval
	Stroke Rate
	Pulse
	Level
Display Size	5.5 Inch
Display type	LCD
Programme overview	
Quick start	1
Target programmes	3

Interval programmes	3
Game mode	1
Other data	
Menu language	English
Wireless connection	Yes
Pulse measurement	Optional: chest strap
Use class	H

1.2 Technical Drawings

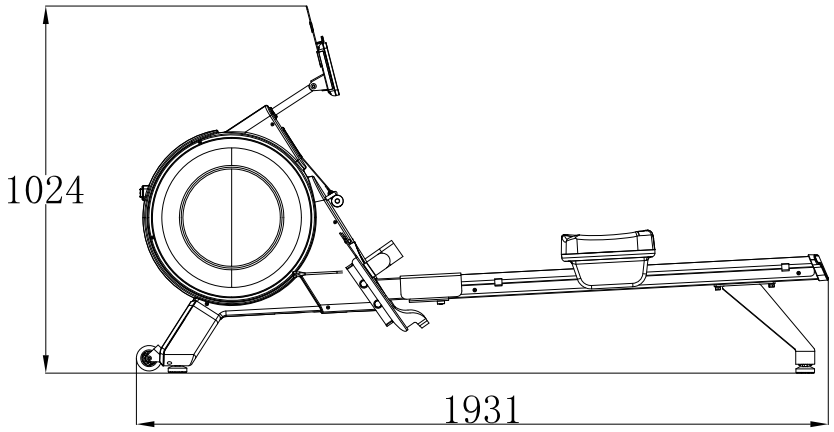

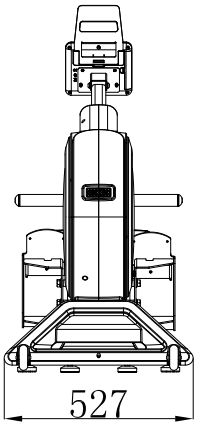

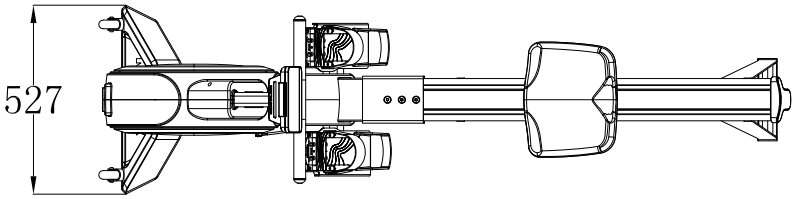

1.3 Personal Safety

⚠ **DANGER**

+ Before you start using the equipment, you should consult your physician that this type of exercise is suitable for you from a health perspective. Particularly affected are persons who: have a hereditary disposition to high blood pressure or heart disease, are over the age of 45, smoke, have high cholesterol values, are overweight and/or have not exercised regularly in the past year. If you are under medical treatment that affects your heart rate, medical advice is absolutely essential.
+ Note that excessive training can seriously endanger your health. Please also note that heart rate monitoring systems can be inaccurate. If you notice any signs of weakness, nausea, dizziness, pain, shortness of breath, or other abnormal symptoms, stop exercising immediately and seek advice from your doctor if necessary.
+ The owner must communicate all warnings and instructions to the user.

⚠ **WARNING**

+ This equipment may not be used by children under the age of 14.
+ Children should not be allowed unsupervised access to the equipment.
+ Persons with disabilities must have a medical license and must be under strict observation when using the equipment.
+ The equipment is strictly for use by one person at a time.
+ If your equipment provides a safety key, the clip of the safety key must be attached to your clothing before starting your training. In the event of a fall, the EMERGENCY STOP of the equipment can be initiated.
+ Keep your hands, feet and other body parts, hair, clothing, jewellery and other objects well clear of moving parts.
+ During use, wear suitable sports clothing rather than loose or baggy clothing. When wearing sports shoes, make sure they have suitable soles, preferably made of rubber or other non-slip materials. Shoes with heels, leather soles, studs or spikes are unsuitable. Never exercise barefoot.
+ The appliance must be set up on a stable and level surface.

⚠ **CAUTION**

+ If your equipment needs to be connected to the power supply with a mains cable, make sure that the cable is not a potential tripping hazard.
+ Make sure that nobody is within the range of motion of the equipment during training so as not to endanger you or other persons.
+ Be aware that if adjustment devices are left protruding, they may impede the user's movement.

► **ATTENTION**

+ Do not insert any objects of any kind into the openings of the device.
+ The safety level of the equipment can only be maintained if it is regularly checked for damage and wear.
+ To protect the equipment from use by unauthorised third parties, always remove the power cable (if existing) when not in use and store it in a safe place that is inaccessible to unauthorised persons (e.g. children).

1.4 Electrical Safety

⚠ **DANGER**

+ In order to reduce the risk of an electric shock, always unplug the equipment from the mains socket immediately after your workout, before assembly or dismantling, and before maintenance or cleaning. Do not pull on the cable.

⚠ **WARNING**

+ Do not leave the equipment unattended while the mains cable is plugged into the mains socket. During your absence, the mains cable must be removed from the mains socket to prevent improper use by third parties or children.
+ If the mains cable or plug is damaged or defective, contact your contract partner. Until repair, the equipment must not be used.

► **ATTENTION**

+ The equipment requires a mains connection of 220-230 V with 50 Hz mains voltage.
+ The equipment may only be connected directly to an earthed socket using the supplied mains cable. Extension cables must conform to VDE guidelines. Always completely unwind the mains cable.
+ The socket must be protected by a fuse with a minimum fuse rating of "16 A, slow blow".
+ Do not make any changes to the mains cable or the mains plug.
+ Keep the mains cable away from water, heat, oil and sharp edges. Do not route the mains cable underneath the equipment or under a carpet or rug, and do not place any objects on top of it.

ⓘ **NOTICE**

+ Hereby, Fitshop GmbH declares that the radio equipment type Wireless Connection (2.402 – 2.480 GHz) complies with Directive 2014/53/EU. The full text of the EU Declaration of Conformity is available at the following website: www.fitshop.com.

1.5 Set-Up Place

⚠ **WARNING**

+ Do not place the equipment in main corridors or escape routes.

⚠ **CAUTION**

+ Choose a location in which to place the equipment such that there is enough free space/ clearance to the front, the rear and to the sides of the equipment. Make sure that you leave at least 30 cm on each side of the equipment and at least 15 cm in front of and behind the equipment as a training zone. This is the minimum required area in order to safely use the equipment. The recommended free zone around the equipment should be at least 60 cm on each side and 45 cm in front of and behind the equipment.
+ The training room should be well ventilated during training and not be exposed to any draughts.
+ Choose the place in which to set up the equipment such that there is enough free space/ clearance to the front, the rear and to the sides of the equipment.
+ The set-up and mounting surface of the equipment should be flat, loadable and solid.

► **ATTENTION**

+ The device may only be used in one building, in sufficiently tempered and dry rooms (ambient temperatures between 10°C and 35°C). The equipment should not be used outdoors or in rooms with high humidity (over 70%) like swimming pools.
+ A floor protective mat/equipment underlay can help to protect high-quality floor coverings (parquet, laminate, cork, carpets) from dents and sweat and can help to level out slight unevenness.
+ For Class S equipment, the exercise equipment may only be used in areas where access, supervision and control are specifically regulated by the owner.

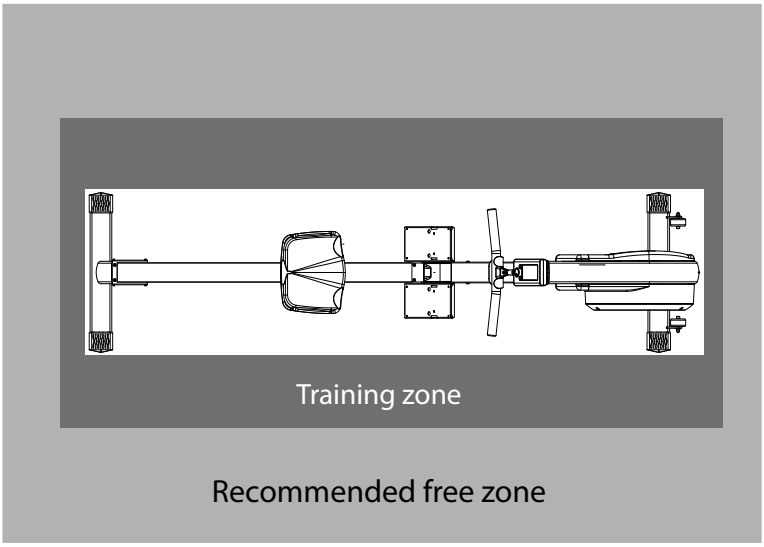

2.1 General Instructions

⚠ **DANGER**

+ Do not leave any tools, packaging materials such as foils or small parts lying around, as otherwise there is a danger of suffocation for children. Keep children away from the equipment during assembly.

⚠ **WARNING**

+ Pay attention to the instructions attached to the equipment in order to reduce the risk of injuries.

⚠ **CAUTION**

+ Ensure to have sufficient room for movement in each direction during assembly.
+ The assembly of the equipment must be carried out by at least two adults. If in doubt, seek the help of a third technically skilled person.

► **ATTENTION**

+ To prevent damage to the equipment and the floor, assemble the equipment on a mat or packaging board.

ⓘ **NOTICE**

+ In order to make the assembly as simple as possible, some screws and nuts to be used can already be pre-assembled.
+ Ideally, assemble the equipment at its later set-up place.

2.2 Scope of Delivery

The scope of delivery consist of the following parts. At the beginning, check whether all parts and tools belonging to the device are included in the scope of delivery and whether damage has occurred. In the event of complaints, the contractual partner must be contacted directly.

⚠ **CAUTION**
If parts of the scope of delivery are missing or damaged, the assembly must not be carried out.

ⓘ **NOTICE**
Required tools: Allen wrench, spanner, multi tool

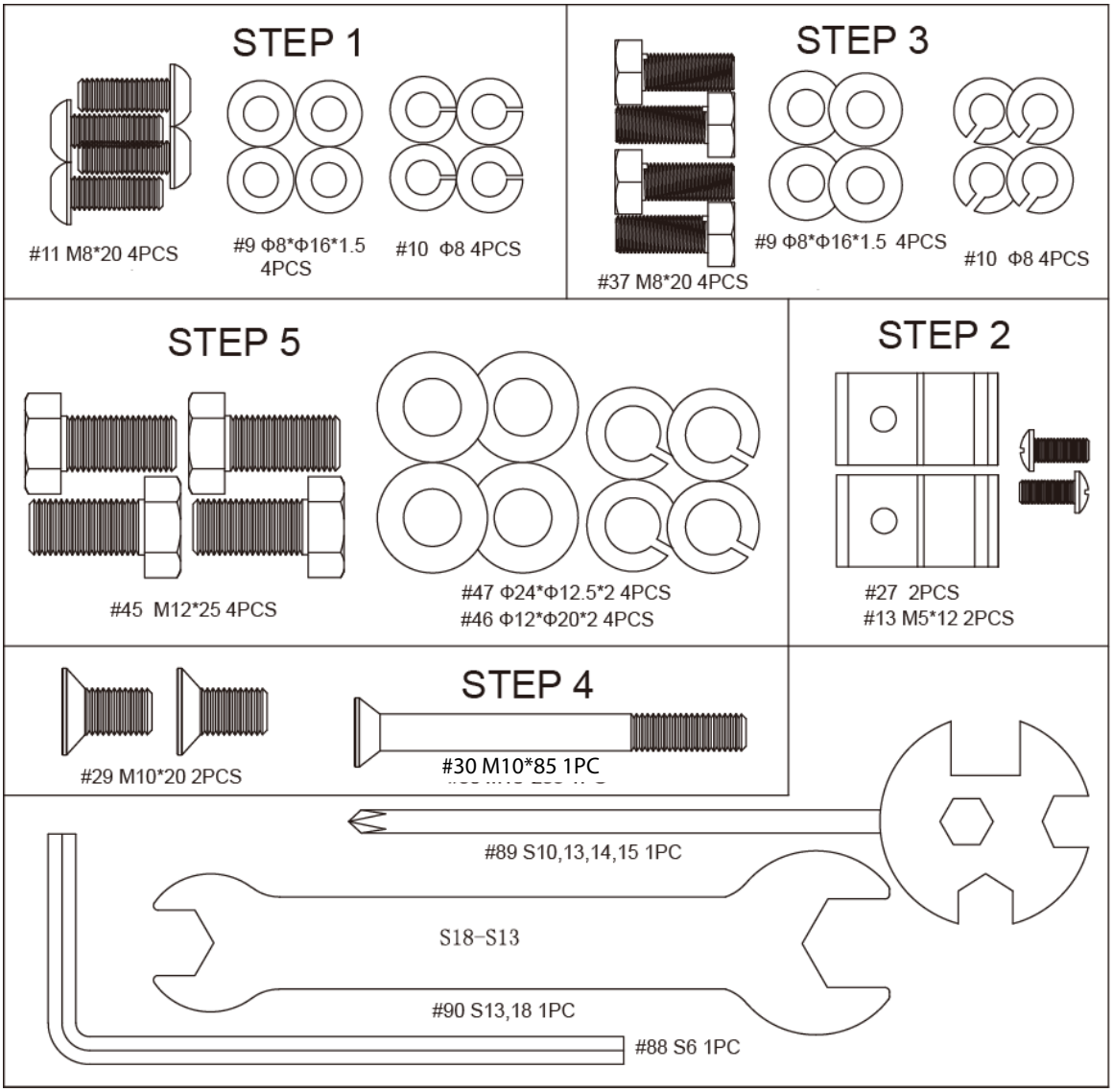

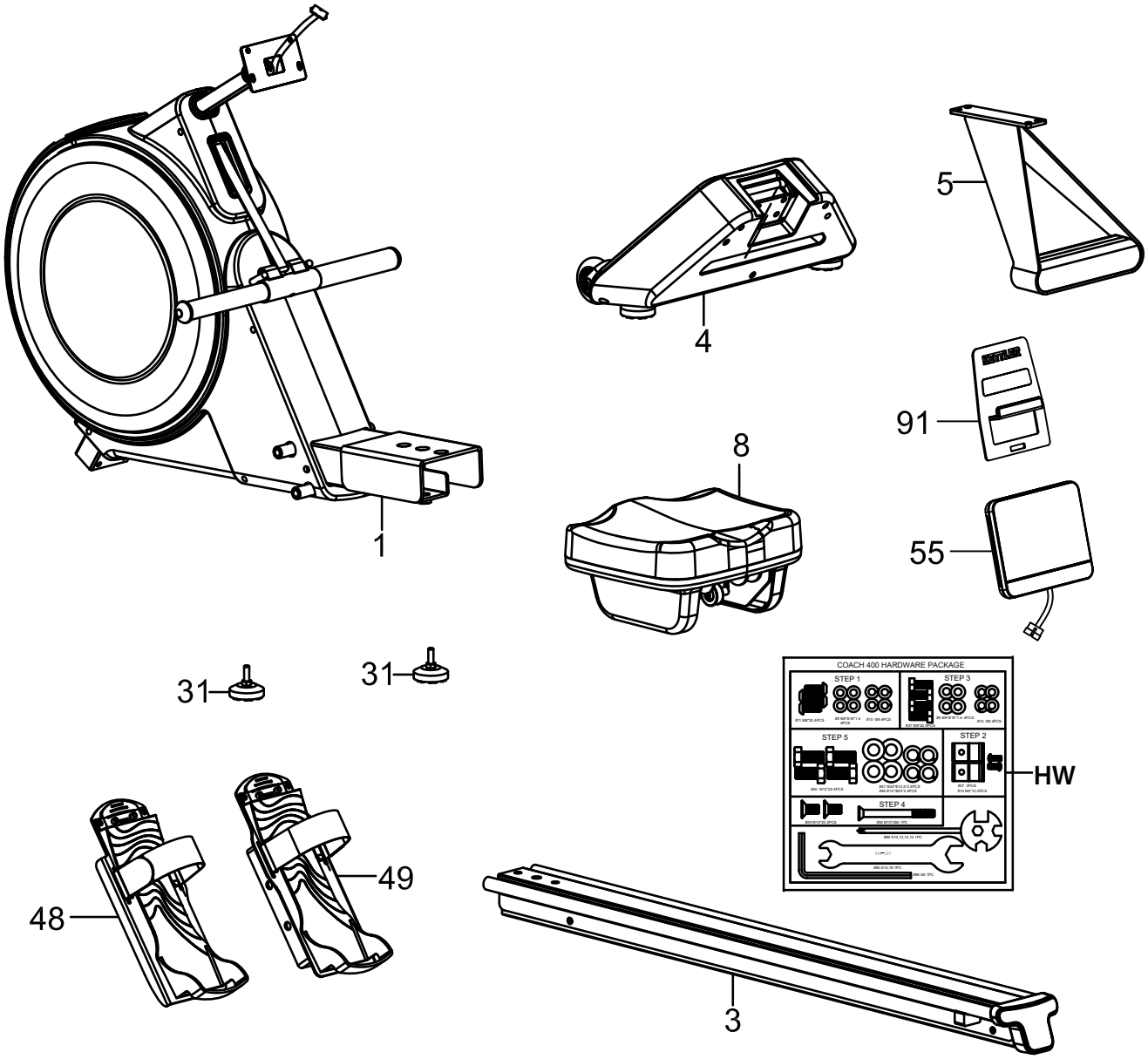

No.	Description	Quantity
1	Main frame	1
3	Sliding rail	1
4	Front stabilizer	1
5	Rear stabilizer	1
8	Seat	1
31	Adjustable feet	2
48	Left pedal assembly	1
49	Right pedal assembly	1
55	Computer	1
91	Tablet holder	1
HW	Hardware package	1

2.3 Assembly

Before assembly, take a close look at the individual assembly steps shown and carry out the assembly in the order given.

NOTICE

+ First loosely screw all parts together and check that they fit properly. Tighten the screws using the tool only when you are instructed to do so.
+ Do not tighten the screws and bolts with excessive force as they could be damaged.
+ If you have difficulty recognising the graphics, we recommend that you open and/or download the PDF instructions stored in the webshop on your end device (e.g. smartphone, tablet or PC). There you have the option of zooming in closer. Please note that the Adobe Acrobat Reader programme must be installed on your end device in order to open the file.

Step 1: Assembly of the front stabilizer

Tool: Allen wrench

1. Fix the front stabilizer (4) to the main frame (1) with four washers (9), four spring washers (10), and four bolts (11).

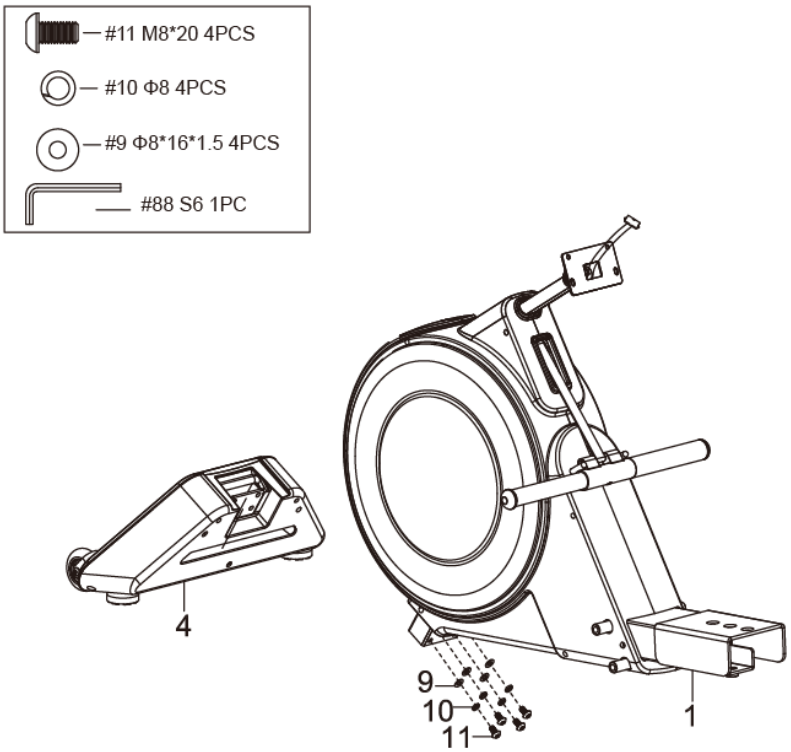

Step 2: Assembly of the sliding rail and seat

Tool: Multi tool

1. Slide the seat (8) onto the sliding rail (3).
2. Fix the two limited blocks (27) to the sliding rail (3) with two bolts (13).

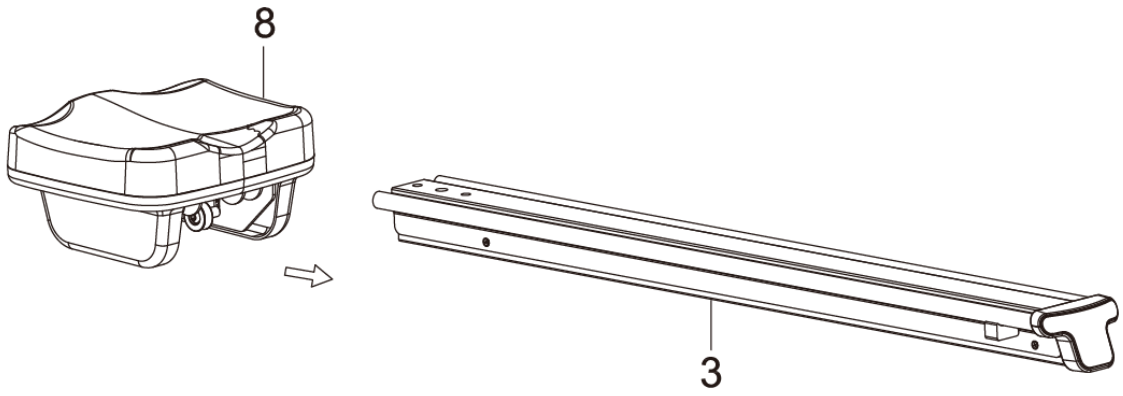

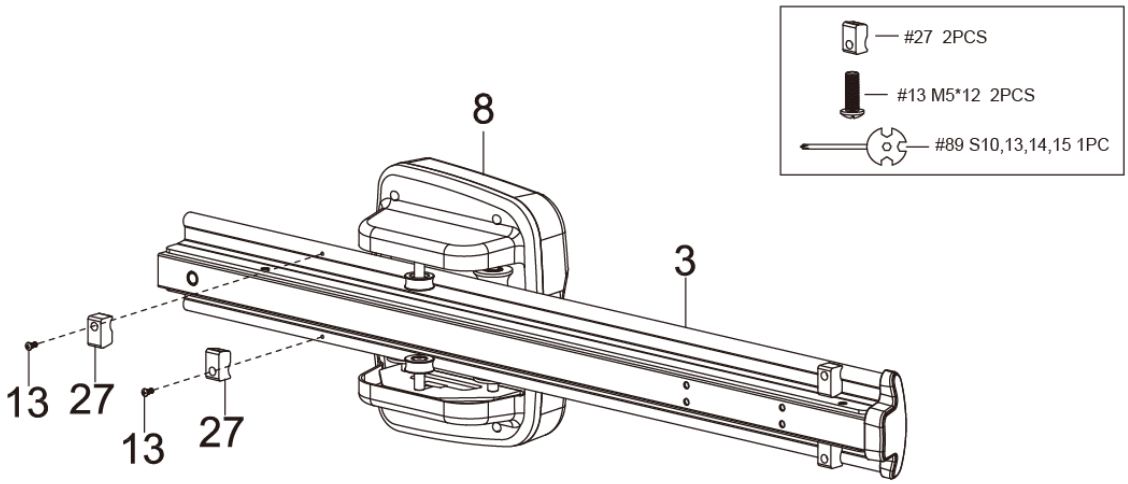

Step 3: Assembly of the rear stabilizer and the adjustable feet

Tool: Spanner

1. Attach the two adjustable feet (31) to the rear stabilizer (5).
2. Fix the rear stabilizer (5) to the sliding rail (3) with four washers (9), four spring washers (10), and four bolts (37).

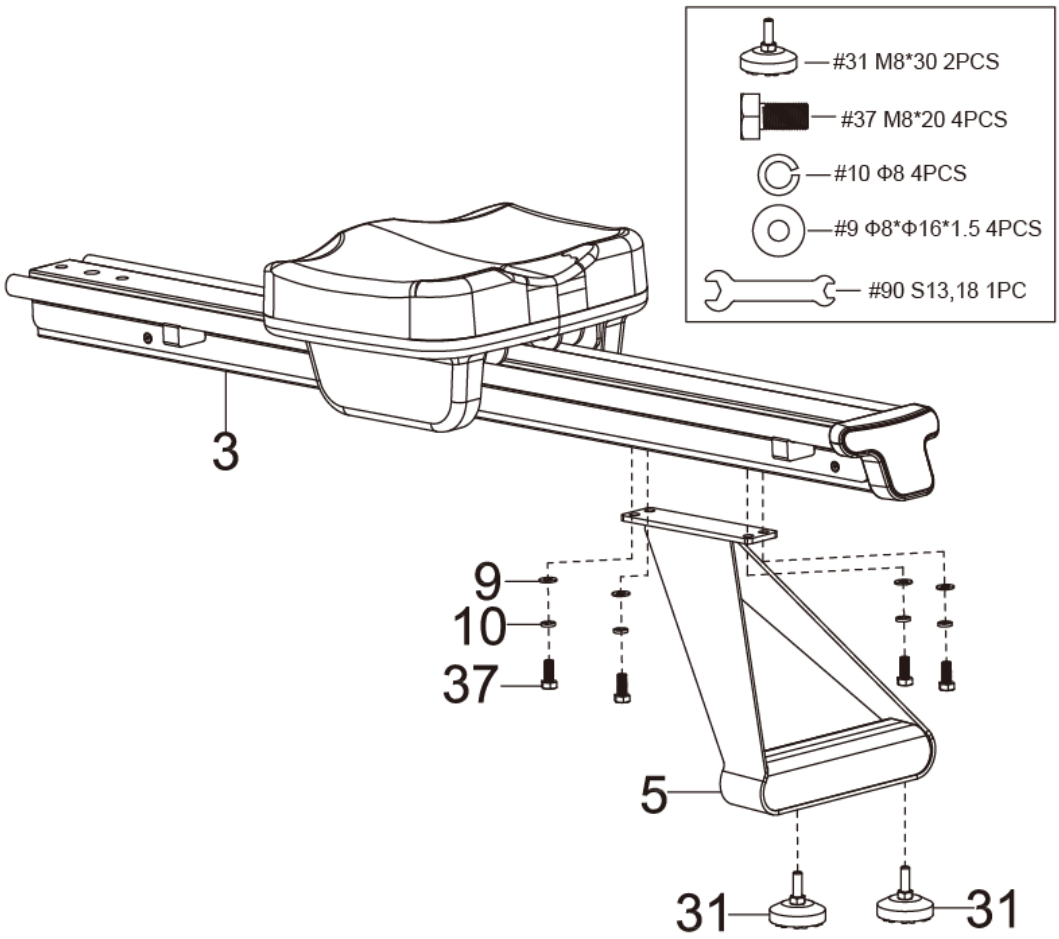

Step 4: Assembly of the sliding rail and the main frame

Tool: Allen wrench

1. Fix the sliding rail (3) to the main frame (1) with two bolt (29) and one bolt (30).

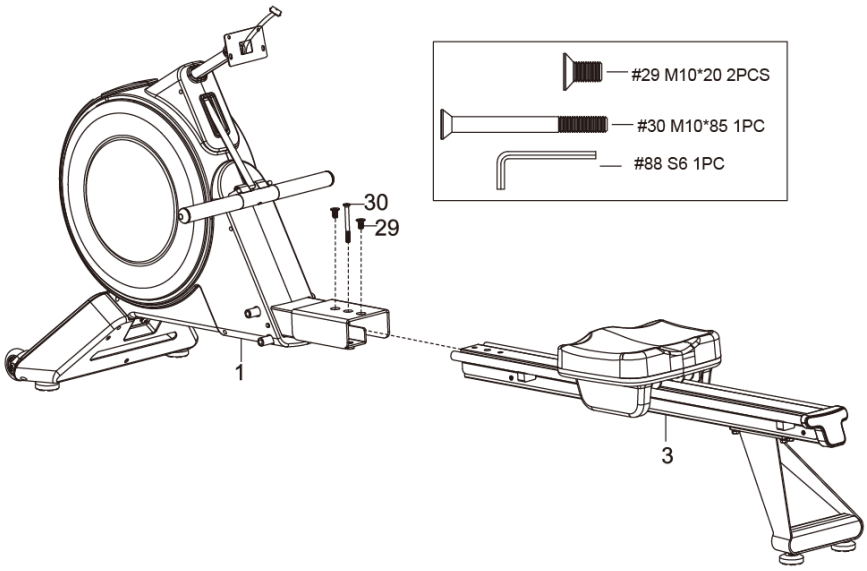

Step 5: Assembly of the pedals

Tool: Spanner

1. Fix the left pedal assembly (48) to the main frame (1) with two washers (47), two spring washers (46), and two bolts (45).
2. Fix the right pedal assembly (49) to the main frame (1) with two washers (47), two spring washers (46), and two bolts (45).

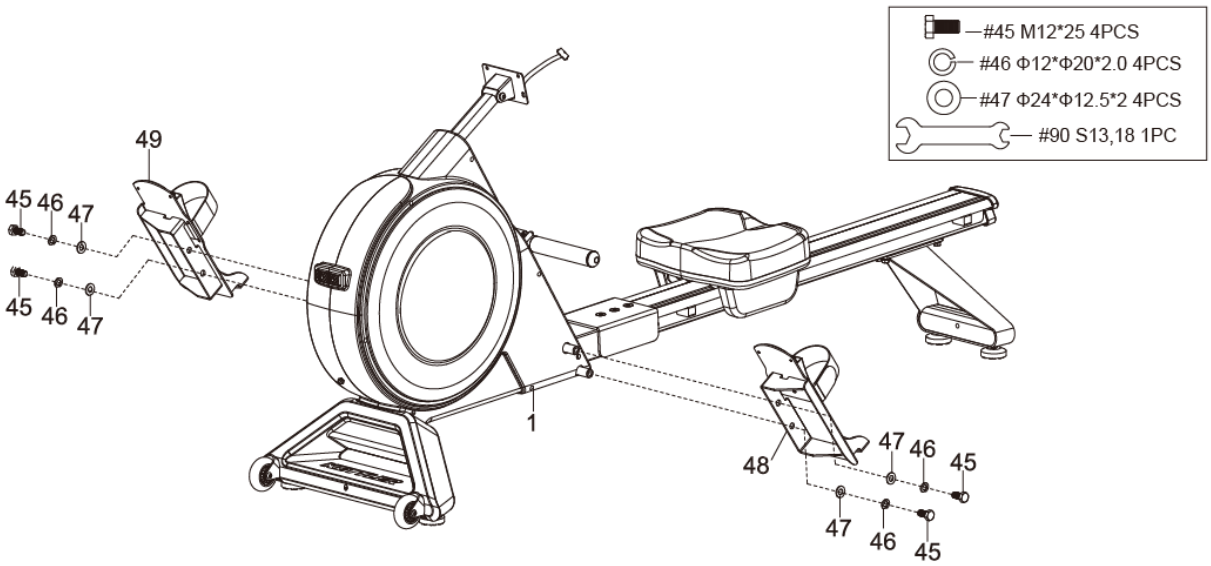

Step 6: Assembly of the computer

Tool: Multi tool

1. Attach the tablet holder (91) to the computer (55).
2. Remove the four bolts (54) from the computer (55).

► **ATTENTION**
   + Be careful not to pinch the cables during the following steps.
   + Ensure that the plug connections are securely in place.

3. Connect the extension sensor wire (87) with the cable of the computer (55).
4. Fix the computer (55) to the holder for computer (7) with the four bolts (54) from step 1.

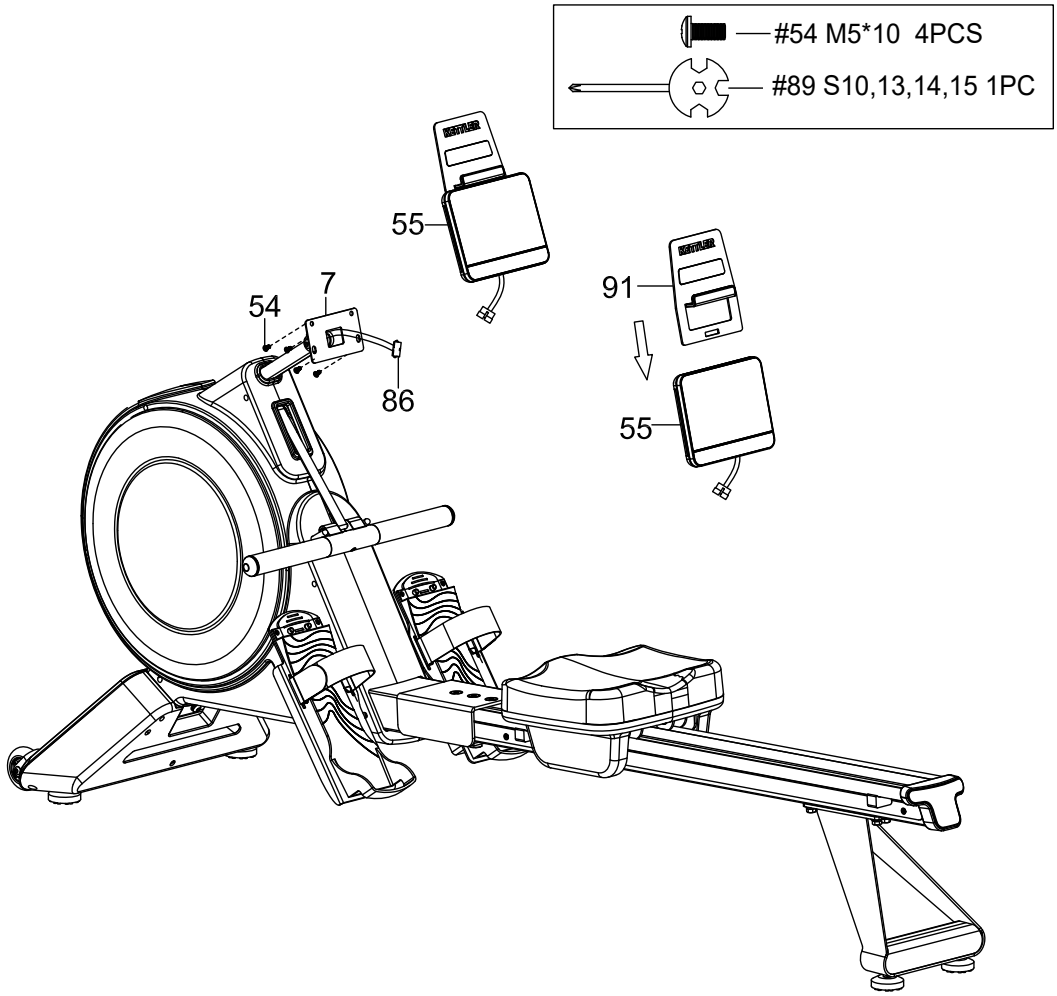

Step 7: Connecting the equipment to the mains supply

► **ATTENTION**
The equipment must not be connected to a multiple socket, otherwise it cannot be guaranteed that the equipment will be supplied with sufficient power. Technical errors can result.

1. Connect the AC adapter (86) with the power supply wire (85).
2. Plug the AC adapter (86) into a wall outlet that complies with the instructions in the chapter on electrical safety.

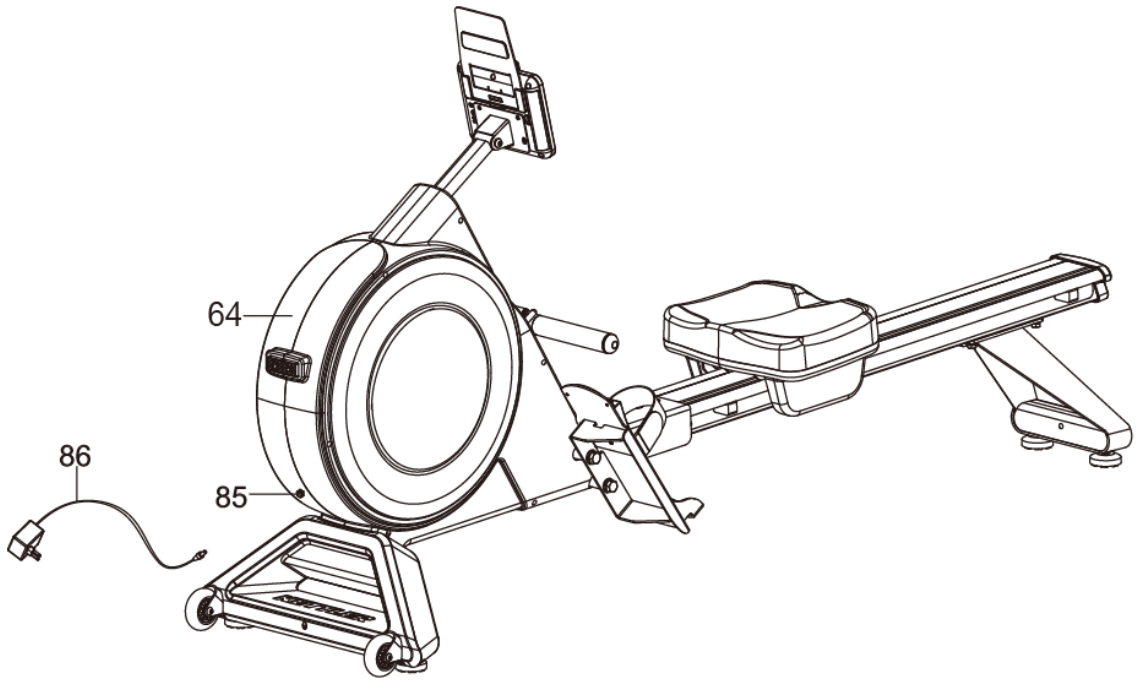

Step 8: Alignment of the feet

If the floor is uneven, you can stabilize the equipment by turning the two setting screws under the adjustable feet (31).

1. Lift the equipment on the desired side and rotate the setting screws under the adjustable feet (31).
2. Rotate the screws clockwise in order to remove them and to raise the equipment.
3. Rotate them counterclockwise in order to lower the equipment.

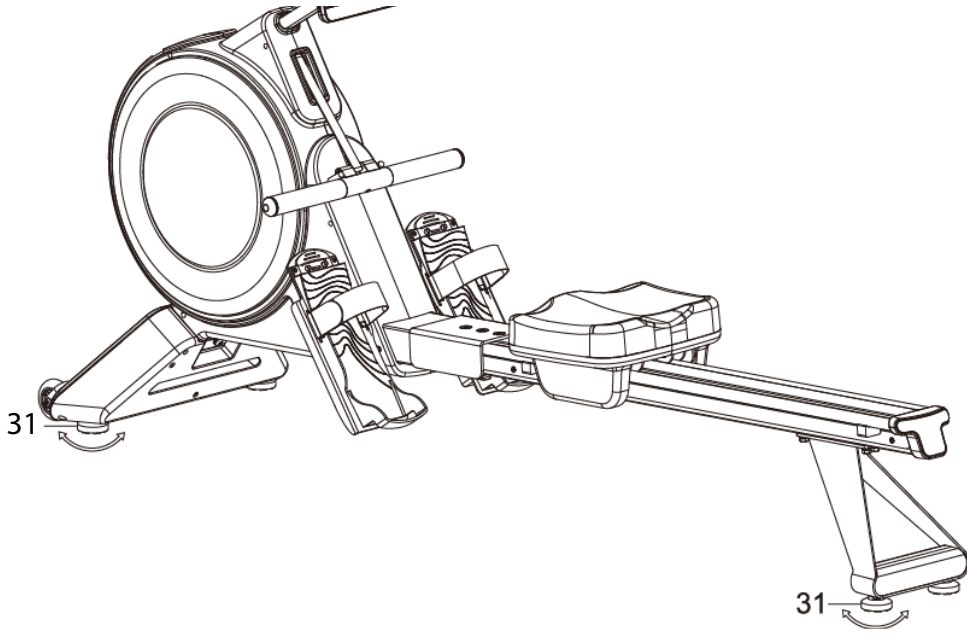

2.4 Adjustment of the Pedal up and Straps

There are multiple settings for the pedal ups. Before starting your training, adjust the pedal ups correctly.

1. Release the strap by opening the buckle and place your foot on the pedal up through the strap.
2. Pull the tab of the pedal up upwards so that your heel is supported and the strap is over the widest part of your foot.
3. Tighten the foot strap at the loose end of the buckle.

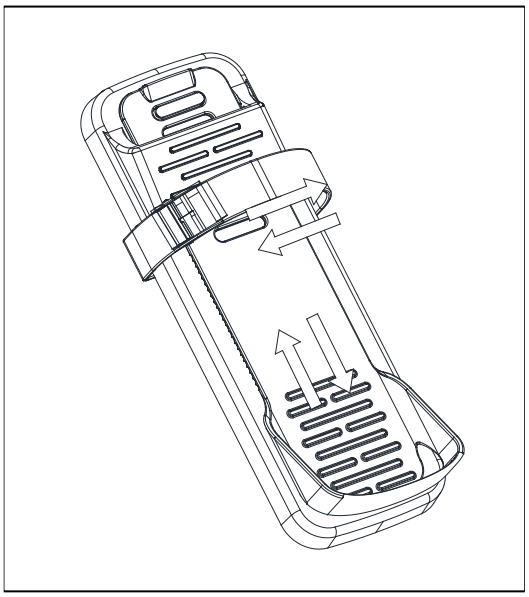

ⓘ **NOTICE**

+ Familiarise yourself with all the functions and setting options of the device before starting training. Have the proper use of this product explained to you by a specialist.
+ Always start your training with low intensity and increase evenly and gently. End your training with a cool-down phase. If you are unsure, please consult your physician.

3.1 Console Display

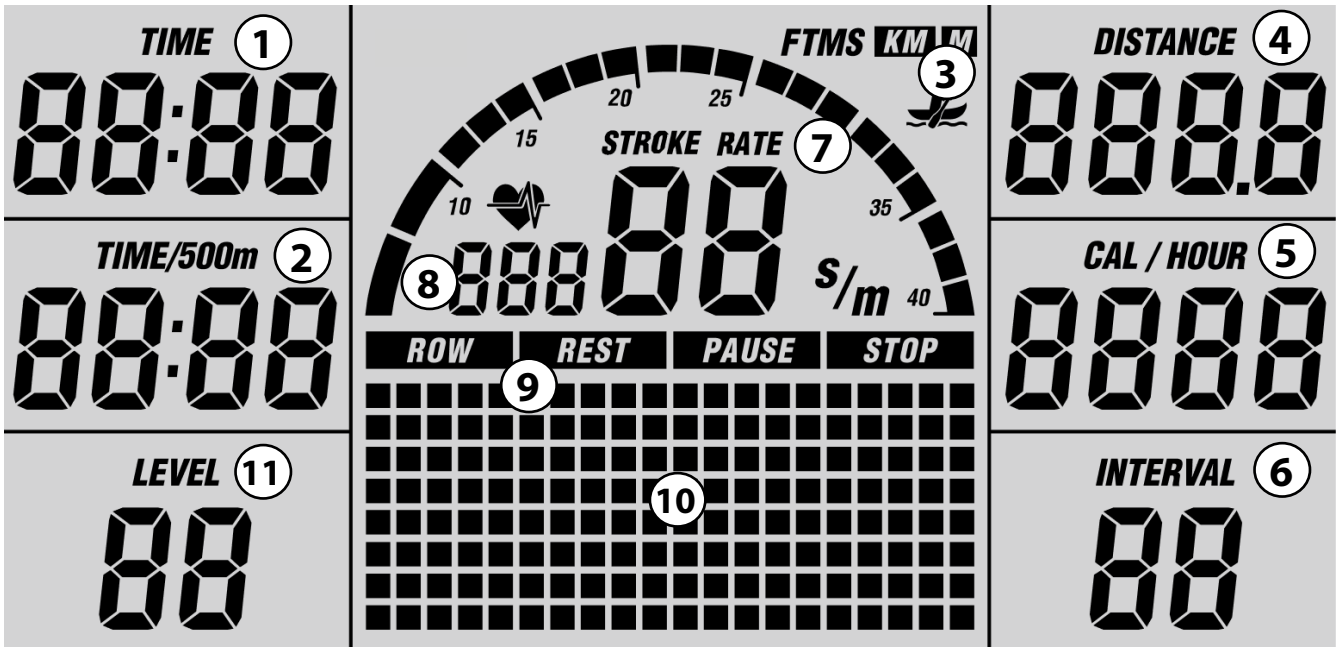

NO.	DISPLAY	NAME	FUNCTION
1	TIME	Time	+ Indicates the training time. + Display range: 00:00–99:59 + Setting range: 00:00-99:00 (in interval mode: 10-99)
2	TIME/500m	Time/500m	+ Indicates the time required to reach 500m at the current speed. + Display range: 00:00–99:59
3	KM/MILE	Kilometre/Miles	Indicates the unit in which the data is displayed.
4	DISTANCE	Distance	+ Displays the distance travelled. + Display range: 0–9999 + Setting range: 100-9999

5	**CALORIES CAL/HOUR**	**Calories Calories per hour**	+ Displays the burned calories + Displays the average calories burned per hour. + Display range: 0–9999 + Setting range: 10-990
6	**INTERVAL**	**Interval**	+ Divide the training into intervals. + Setting range: 1–99
7	**STROKE RATE**	**Stroke rate**	Indicates the strokes per minute.
8	**PULSE**	**Pulse**	Displays your heart rate when using a chest strap (not included).

9	**EXCERCISE
	STATUS**
		Exercise status	+ PAUSE is displayed in pause state.
			+ STOP is displayed when the workout ends.
			+ **In interval modes:**
			  + ROW is displayed during exercise intervals
			  + REST is displayed during rest intervals.

10	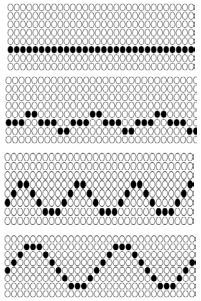	**Matrix display**	**Wave illustrations:** + Static wave - no rowing + Stage 1 - slow rowing + Stage 2 - medium rowing + Stage 3 - fast rowing
11	**LEVEL**	**Level**	+ Displays the current rowing resistance level. + Display range: 1 - 32

3.2 Button Function



DISPLAY	BUTTON	FUNCTION
	**FTMS**	Establish an FTMS or a wireless connection with your mobile device.
	**BACK**	+ Return to the standby mode + Return to the previous setting step in the programme settings
	**SELECT**	Select a programme
	**ENTER/STOP**	+ Set values + Enter programme settings + Pause the workout + End the workout (and return to standby mode)
	**DOWN**	Decrease values
	**UP**	Increase values

3.3 Display Modes

The following table provides an overview of the console display modes. This overview will help you navigate the training programmes.

MODE	FUNCTION
STANDBY MODE	+ No training programme is in use. + Start the quick start programme. + After 2 minutes of inactivity in standby mode, the console switches off.
SLEEP MODE	+ This is the sleep mode that the console enters after two minutes of inactivity in standby mode. + The console is not lit up and no data is displayed. + To exit sleep mode, press any button on the device.
TRAINING MODE	+ Your training data is displayed in training mode.

3.4 Displayed Values

This chapter provides a description of the displayed values on the console.

VALUE	DESCRIPTION
CALORIES	Calories indicates the calories that are burned during the training.
CAL/HOUR	Calories per hour indicates the average calories burned per hour.

Alternating the displayed values:

ⓘ **NOTICE**

+ The following data is displayed during training: **CALORIES, CAL/HOUR**
+ The values switch every 5 seconds.

3.5 Training Programmes

Your device offers a selection of training programmes to help you achieve your training goals. The following training programmes can be accessed

PROGRAMME	DESCRIPTION	QUANTITY
QUICK START	Manual training without presets.	1
TARGET PROGRAMMES	Set a target value for your training session. The selected value starts to count down.	3
GAME MODE	Simulates virtual obstacles in a game like setting.	1
INTERVAL PROGRAMMES	Training with preset profiles. Adjust the intervals in advance, if desired.	3

In the following subchapters you will find detailed descriptions of the training programmes.

3.5.1 Quick Start

To start a training session without presets, select Quick Start.

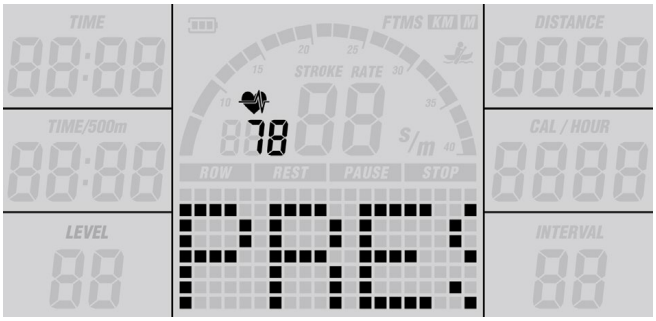

Starting the Quick Start programme:

ⓘ **NOTICE**
The resistance can only be adjusted during training.

1. Start rowing.
2. To set the resistance, set the value with ^/v.

All values count up.

3. To pause the training session, press ENTER/STOP.

3.1. To continue the training session, start rowing again.

4. To end the training session, press ENTER/STOP when in pause mode.

→ ***The console enters standby mode.***

3.5.2 Target Programmes

To start a training session with target values, select one of the three target programmes.



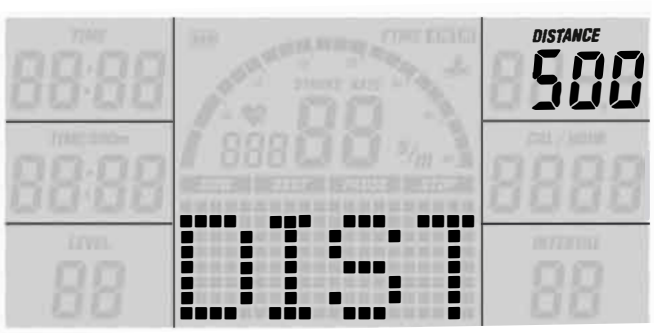

Starting the target programmes:

ⓘ **NOTICE**
The resistance can only be adjusted during training.

1. To select the time, distance or calories target programme (CALORIES, TIME, DISTANCE), press SELECT in standby mode.
2. To set the resistance, set the value with ^/v.

The console enters the programme settings.

ⓘ **NOTICE**
To exit the programme settings and return to standby mode, you can press BACK at any time.

3. To set the target value, press ^/v.
4. To start the programme, start rowing.

The set target value counts down, the remaining values count up.

5. To pause the training session, press ENTER/STOP.

5.1. To continue the training session, start rowing again.

6. To end the training session, press ENTER/STOP in pause mode.

When the target value reaches 0, the programme is stopped automatically and the training summary is displayed.

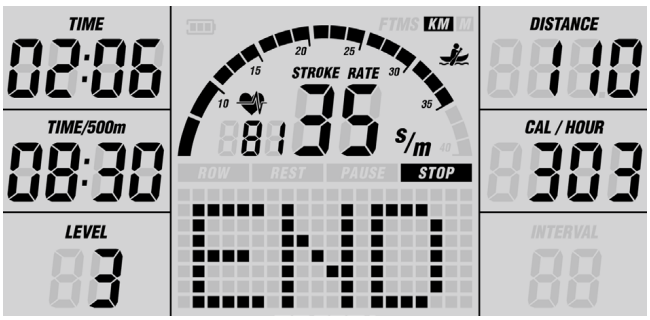

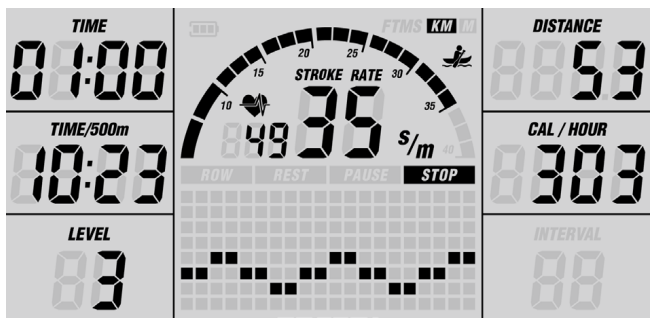

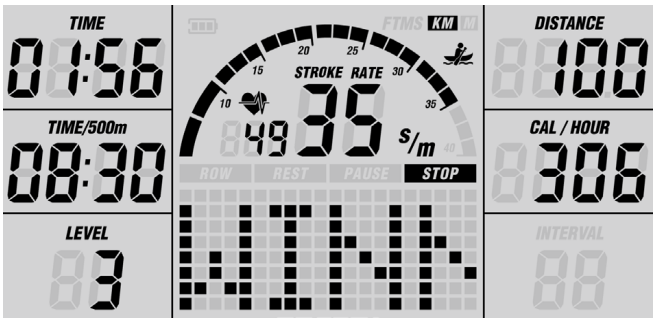

7. Press BACK or ENTER/STOP to return to standby mode.

→ ***The console enters standby mode.***

3.5.3 Interval Programmes

In interval mode, you divide your workout into recovery and high-intensity phases. There are two pre-set interval programmes and one customizable interval programme.

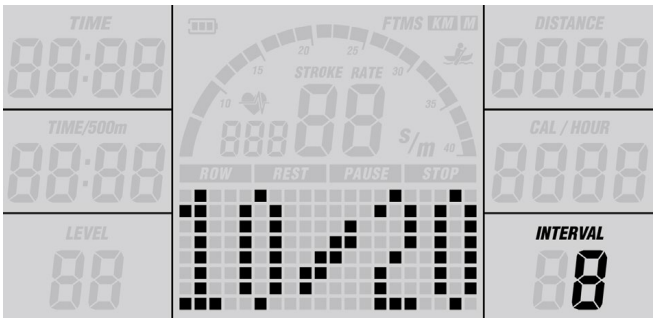

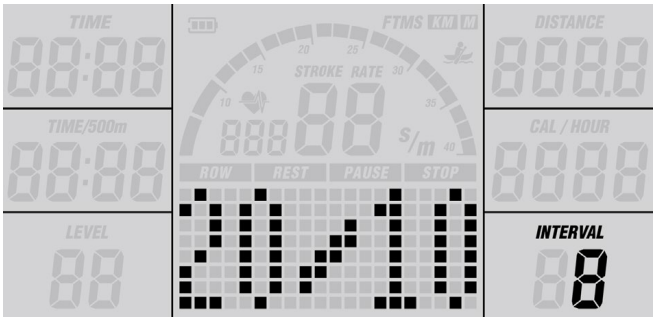

Starting the interval programmes:

1. To select the 10/20, 20/10 or customizable interval programme, press SELECT in standby mode.

The console enters the programme settings.

ⓘ **NOTICE**
To exit the programme settings and return to standby mode, you can press BACK at any time.

2. Custom interval programme:

2.1. To set the desired duration of the work and rest phases, press ^/v.

2.2. To confirm each setting, press ENTER.

2.3. To set the number of intervals, press ^/v.

2.4. To start the programme, start rowing.

The set number of intervals counts up.

3. To pause the training session, press ENTER/STOP.

3.1. To continue the training session, start rowing again.

4. To end the training session, press ENTER/STOP in pause mode.

When the number of intervals is reached, the programme ends and the training summary is displayed.

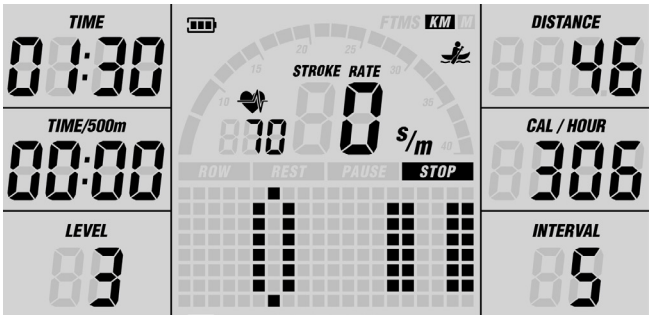

5. Press BACK or ENTER/STOP to return to standby mode.

→ ***The console enters standby mode.***

3.5.4 Game Mode

In this mode, virtual obstacles are simulated, which you must avoid by increasing or decreasing your rowing intensity.



Starting the Game Mode:

1. To select the game mode, press SELECT in standby mode.
2. To start the programme, start rowing.

The time counts down, the remaining values count up.

3. To pause the training session, press ENTER/STOP.

3.1. To continue the training session, start rowing again.

4. To end the training session, press ENTER/STOP in pause mode.

When the time reaches 0, the programme is stopped automatically and the training summary is displayed.

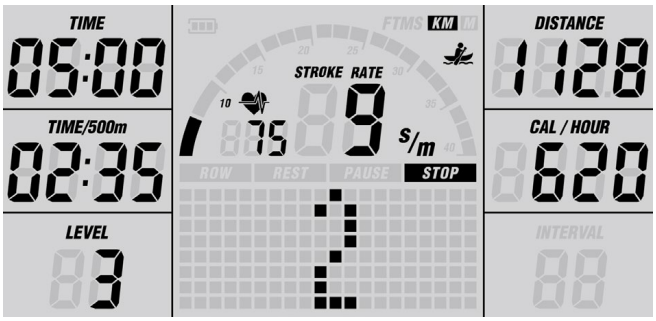

5. Press BACK or ENTER/STOP to return to standby mode.

→ ***The console enters standby mode.***

3.6 Activate the Wireless Connection

This console is equipped with a wireless interface. The wireless connection allows you to connect a fitness app (Kinomap) with your device.

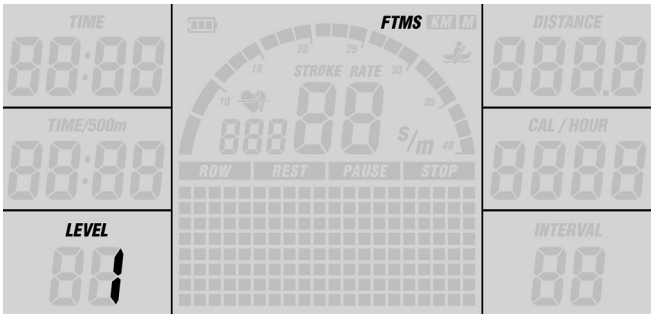

Activating/Deactivating the connection:

ⓘ **NOTICE**
The wireless connection is enabled by default.

1. To deactivate/activate the connection, press FTMS in standby mode.

When the wireless connection *is activated: a beep sound emits, the FTMS icon lights up and Level is shown on the display.*

When the wireless connection *is deactivated: a beep sound emits and the FTMS icon lights up and the console returns to standby mode.*

The wireless connection is activated/deactivated.

ⓘ **NOTICE**
The connection can be established in standby mode and training mode.

2. To connect the fitness app with the console, open the wireless connection settings on your mobile device/fitness app and connect the devices with each other.

A sound appears, the FTMS button lights up, and the console enters sleep mode.

3. To exit the wireless connection, stop the connection on your mobile device or press FTMS.

A sound appears, the FTMS button light switches off, and the console enters standby mode.

→ ***The wireless connection is switched off.***

4.1 General Instructions

When training, it is important to perform the exercises correctly in order to avoid injuries and achieve the desired training effect. Make sure you use the correct technique and train at an appropriate
intensity level. Always consult an expert such as a trainer or doctor if you are unsure or have health
problems. Always start your training with a low load and increase it evenly and gently.
End your training with a cool-down phase. If you have any questions or uncertainties, contact your doctor.
To get tips for a safe and effective training, use the QR-code provided.

4.1.1 Training clothes

During training, wear appropriate sports clothing that is comfortable and breathable. Avoid clothing that restricts you or is uncomfortable. Make sure that your shoes are suitable and offer you sufficient support. In addition, always carry a towel with you to wipe away sweat and keep the equipment clean.

4.1.2 Warming up and stretching

It is important to warm up and stretch properly before training to avoid injury and improve performance. Stretching helps to loosen muscles and improve flexibility. Be sure to incorporate a short stretching routine before each workout.

Warm-up exercise:

1. Stand upright with your feet about shoulder-width apart.
2. Start with gentle arm circles by slowly moving your arms forwards in small circles in a controlled manner.
3. Perform arm circles backwards to loosen your shoulders and arms.
4. Do squats by slowly squatting down and then straightening up again. Make sure that your knees do not extend beyond your toes.

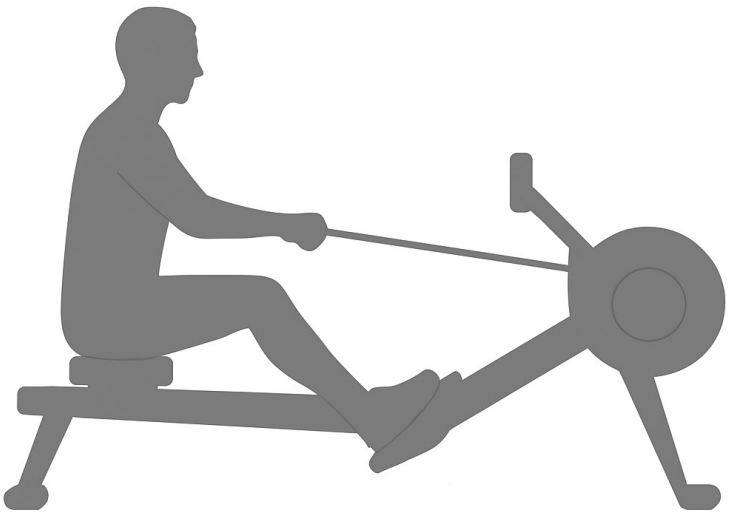

⚠ **CAUTION**
Do not exercise with sore muscles or take it easy on the affected muscles, as this can lead to injuries.

4.1.3 Medication

If you regularly take medication and want to exercise, it is important to be aware of possible side effects. Ask your doctor whether your medication affects your workout.

4.1.4 Used muscle groups

Rowing uses the following muscle groups:



+ Back muscles
+ Shoulder muscles
+ Arm muscles
+ Abdominal muscles
+ Leg muscles

Make sure you keep your back straight during training. Do not hunch over and do not arch your back. Do not fully extend your legs, but keep a slight bend in the backwards movement.

4.1.5 Exercise frequency

Regular exercise is crucial to making progress and staying healthy in the long term. Continuous exercise can strengthen muscles, improve endurance and enhance overall well-being. Remember that even small workouts can be done regularly to achieve long-term results.

Training with heart rate orientation
Heart rate orientation guarantees an extremely effective and healthy training. Through your age and the following table, you can quickly and easily read and determine the optimal pulse for your training. An acoustic alarm will sound if your heart rate exceeds the set target heart rate. Which target heart rate is important for which training goal can be found out in the following.

Fat burning (weight management): The main goal here is to burn deposits of fat. In order to achieve this training goal, a low training intensity (approximately 55% of the maximum heart rate) and a longer training period are required.

Cardiovascular training (cardio training): The primary goal is to increase stamina and fitness through an improved provision of oxygen through the cardiovascular system. In order to achieve this training goal, medium intensity (approximately 75% of the maximum heart rate) with a medium training period is required.

Anaerobic (maximum) load training: The main goal of maximum load training is to improve recovery after short, intense loads in order to be able to quickly return to the aerobic zone. In order to achieve this training goal, a high intensity (approximately 90% of the maximum heart rate) with short, intense load is required, which is followed by a recovery phase in order to prevent muscle fatigue.

Example:
For a 45-year-old man, the maximum heart rate is 175 (220 - 45 = 175).

+ The fat burning target zone (55%) is at approximately 96 beats/min. = (220 - age) x 0.55.
+ The cardio target zone (75%) is at approximately 131 beats/min. = (220 - age) x 0.75.
+ The maximum heart rate for an anaerobic load training (90%) is at approximately 157 beats/min. = (220 - age) x 0.9.

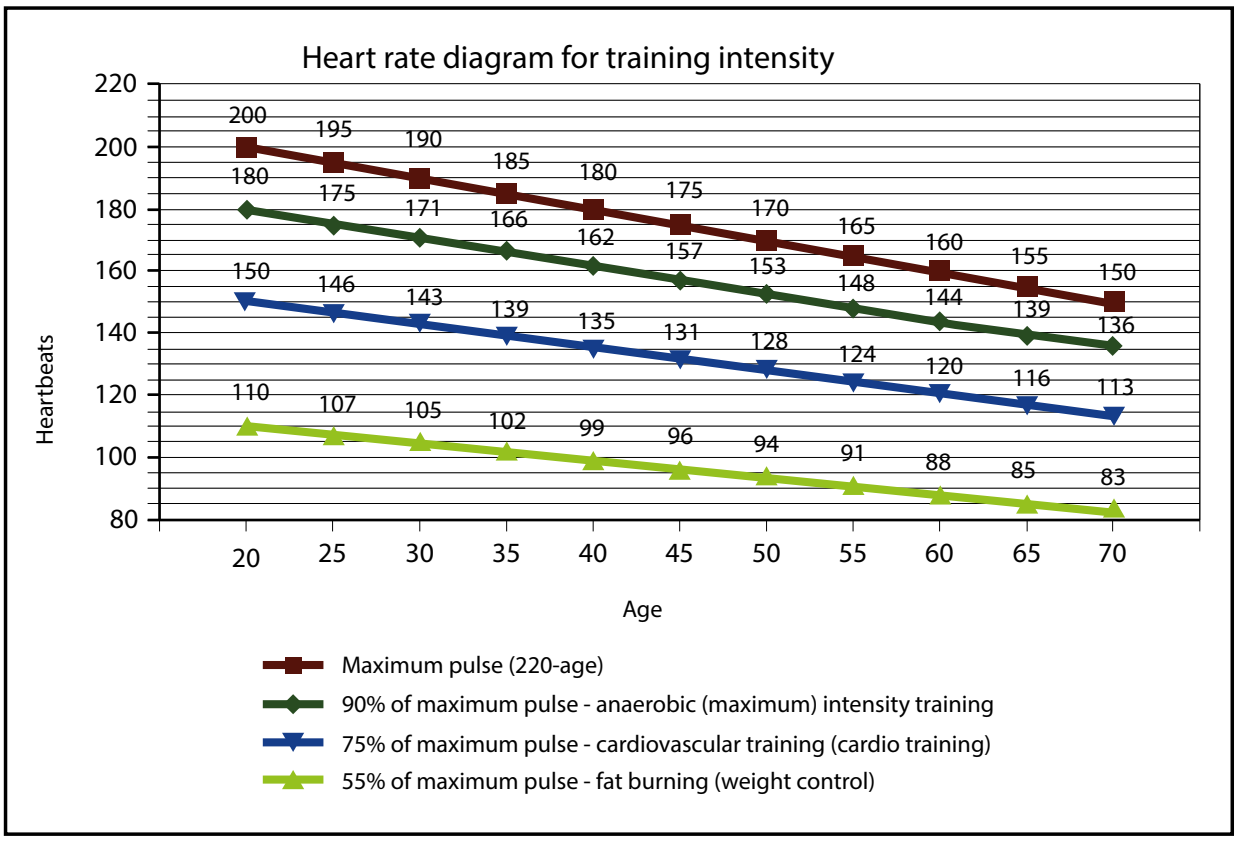

4.2 Workout journal

				kg				

(Copy template)

Date

Distance

Time (min.)

Resistance level

Training weight

Ø Pulse

Calories burnt

I feel ...

Body weight

4.3 Wireless Connection and Fitness Apps

This console is equipped with a wireless interface. Please take note that your mobile device needs to be compatible with the wireless interface of the treadmill.

To use training apps you will have to activate the wireless connection function on your mobile device (tablet or smart phone) and start the fitness app. Select your fitness equipment. Please follow the instructions given in the app. You will find the name of your fitness euqipment on a small sticker on the back of the console.

You will find the fitness apps in the app stores of Google or Apple. There you will find the app "Kinomap". Please note that these apps are produced by an external manufacturer. Fitshop does not take any responsibility regarding the availability, functionality or contents of these programmes.

ⓘ IMPORTANT NOTE

Some entertainment apps are provided and maintained by third-party providers. Pre-installed apps may change, be updated, or be removed over time. These changes are normal and do not affect your statutory warranty rights. To make sure the pre-installed apps are working correctly, they must be updated regularly. If needed, the respective app will notify you to do so. To update the app, you need a google account. A google email is sufficient. Just follow the instructions on the screen to perform the update. Please note: The system is set up only for the pre-installed apps. Do not install any additional apps as their proper functionality can not be guaranteed. The installation of other apps might cause technical issues.

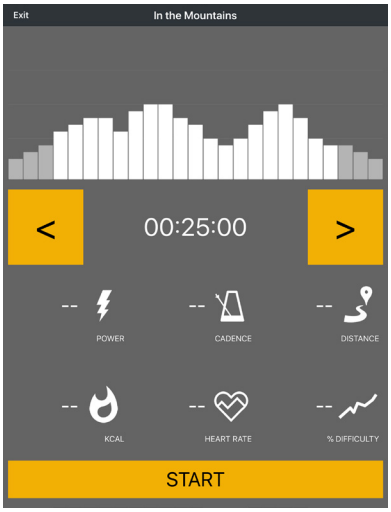

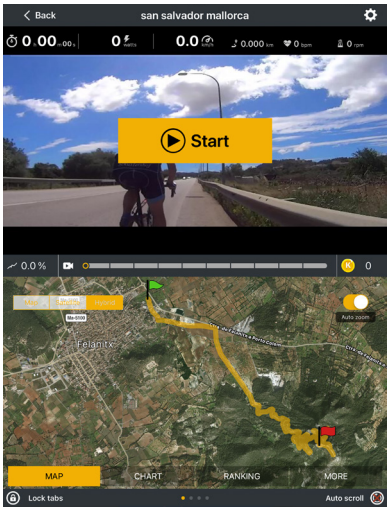

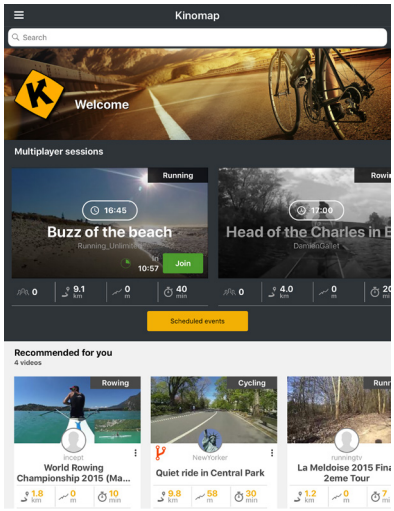

Example: Kinomap

5.1 General Instructions

⚠ **WARNING**

+ The storage location should be chosen so that improper use by third parties or children can be prevented.
+ If your equipment does not have transportation wheels, the equipment must be disassembled before transportation.

► **ATTENTION**

+ Make sure that the equipment is protected from moisture, dust and dirt in the selected storage location. The storage location should be dry and well ventilated and have a constant ambient temperature between 10°C and 35°C.

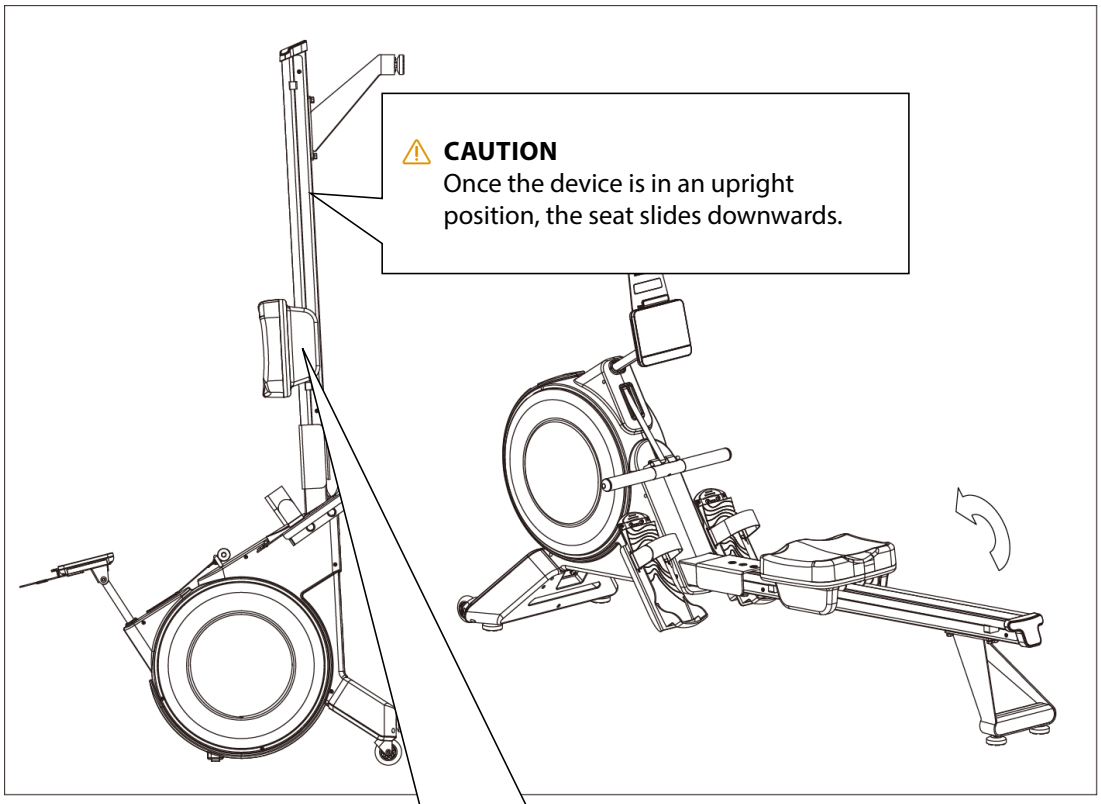

If the device is not in use, it can be stored upright to save space.

6.2 Transportation Wheels

► **ATTENTION**
If you want to transport your equipment over particularly sensitive and soft floor coverings, such as parquet, planks or laminate, lay out the transport route with cardboard or similar to avoid possible floor damage.

1. Stand behind the equipment and lift it until the weight is transferred to the transportation wheels. After that, you easily can move the equipment to a new position. For long transport distances the equipment should be disassembled and safely packed.
2. Select the new location by following the instructions in the section 1.5 of this manual.

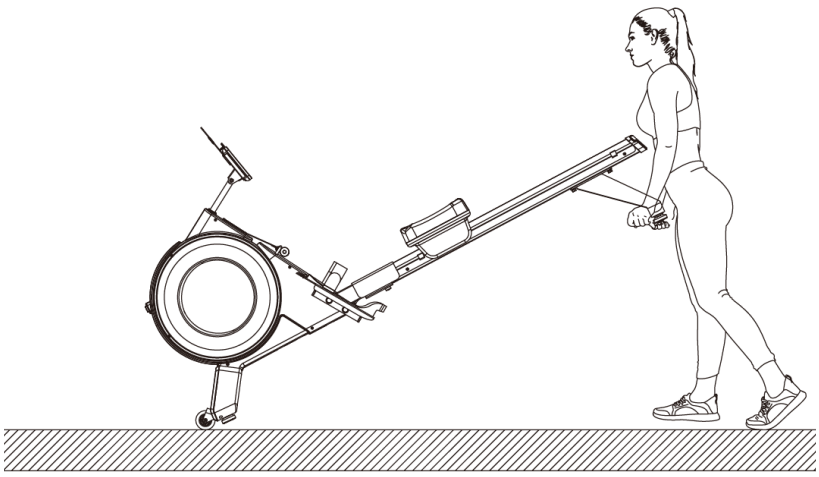

6 TROUBLESHOOTING, CARE AND MAINTENANCE

6.1 General Instructions

⚠ **WARNING**
+ Do not make any improper changes to the equipment.
+ To maintain the safety level of the equipment, it must be checked regularly for damage and wear - especially on the foot straps, fasteners, handle hoses and seat.

⚠ **CAUTION**
+ Damaged or worn components may affect your safety and the life of the equipment. Therefore, immediately replace damaged or worn components. In such a case, contact the contract partner. The equipment must not be used until it has been repaired. If necessary, use only original spare parts.

► **ATTENTION**
+ In addition to the instructions and recommendations for maintenance and care given here, additional service and/or repair work may be necessary; this must only be carried out by authorised service technicians.

6.3 Faults and Fault Diagnosis

The equipment undergoes regular quality controls during production. Nevertheless, faults or malfunctions may occur. Frequently, individual parts are responsible for these disturbances, an exchange is usually sufficient. Please refer to the following overview for the most common errors and how to correct them. If the equipment still does not function properly, contact your contract partner.

Fault	Cause	Solution
Heart rate is not received	+ Sources of interference in the room + unsuitable chest strap + Wrong position of chest strap + Batteries empty	+ Eliminate sources of interference (e.g. mobile phones, loudspeakers, WLAN, lawn mower and vacuum cleaner robots ...) + Use a suitable chest strap (see recommended accessories). + Reposition chest strap and/or moisten electrodes + Changing batteries
LCD error – software error etc.	Console has no power supply	+ Hold Reset to start the console again. + Start the console again by disconnecting the power cable for about 15 seconds. + Disconnect and connect again all cable connections, see assembly instructions. + Contact a service technician of your contract partner.
Squeaking noises on the guide rails	Guide rails or rollers dirty or guide rails dry	Clean the guide rails and then lubricate them with a suitable lubricant

6.4 Error Codes and Troubleshooting

The electronics of the equipment continuously carries out tests. In case of deviations, an error code appears on the display and normal operation is stopped for your safety.

Please contact the contract partner for technical support.

6.5 Maintenance and Inspection Calendar

To avoid damage from body sweat, the equipment must be cleaned with a damp towel (no solvents!) after each training session.

The following routine tasks must be performed at the specified intervals:

Part	Weekly	Monthly	Quarterly	Half-yearly
Display console	C	I		
Cleaning and lubrication of slide rail and moving parts*		C/I		
Cushions	C			
Plastic covers	C	I		
Screws and cable connections		I		
Legend: C = clean; I = inspect				

*Make sure to always clean the slide rails and moving parts before re-lubricating.

7 DISPOSAL

At the end of its operational life, this equipment cannot be disposed of in normal household waste. Instead, it must be disposed of via an electricals recycling centre. Further information can be obtained from your local authority's recycling service.



The materials can be recycled as per their symbols. Through the reuse, recycling of materials or other forms of recovery of old equipment, you make an important contribution to the protection of the environment.

8 RECOMMENDED ACCESSORIES

To make your training experience even more efficient and pleasant, we recommend that you add suiting accessories to your fitness equipment. For rowing machines this could for example be a **floor mat**, which makes your fitness equipment stand more securely and also protects the floor from sweat or **silicone spray** to keep moving parts in good shape. We also recommend the use of **rowing gloves**. For rowing machines with water resistance, be sure to purchase chlorine tablets.

If you have purchased a fitness machine with pulse training and want to train your heart rate, we strongly recommend that you use a compatible **chest strap**, as this ensures optimum transmission of the heart rate.

Our range of accessories offers the highest quality and makes training even better. If you would like to find out more about compatible accessories, please go to the detail page of the product in our webshop (the easiest way is to enter the article number in the search field above) and go to the recommended accessories on this page. Of course, you can also contact our customer service: by telephone, e-mail, in one of our branches or via our social media channels. We will be happy to advise you!



floor mat



chest strap



chest strap contact gel



rowing gloves



silicone spray

9.1 Serial Number and Model Name

In order to provide you with the best possible service, please have the model name, article number, serial number, exploded drawing and parts list ready. The corresponding contact options can be found in chapter 11 of this operating manual.

ⓘ **NOTICE**
The serial number of your equipment is unique. It's located on a white sticker.

Enter the serial number in the appropriate field.

Serial number:

Brand / Category:

Kettler / rowing machine

Model Name:

Coach 400

Article Number:

K-RO2001-100

9.2 Parts List

No.	Name	Specification	Qty.
1	Main Frame		1
2	Sliding Rail Support		1
3	Sliding Rail		1
4	Front Stabilizer		1
5	Rear Stabilizer		1
6	Handlebar		1
7	Holder For Computer		1
8	Seat		1
9	Washer	Φ8*Φ16*1.5	18
10	Spring Washer	Φ8	14
11	Bolt	M8*20	8
12	Seat Cover		1
13	Bolt	M5*12	10
14	Nut	M8	6
15	Adjusting Screw	M6*40	4
16	U Shape Baffle		4
17	Nut	M6	6
18	Seat Supporting Board		2
19	Short Spacer	Φ12*Φ8.2*14	4
20	Short Spacer II	Φ12*Φ8.5	2
21	Bearing	608	10
22	Seat Wheel		4
23	Casing Pipe for Idler Wheel		2
24	Bolt	M8*50	2
25	Long Spacer	Φ12*Φ8.5*68	2
26	Bolt		2
27	Limited Block		4
28	Screw	ST4.2*20	4
29	Bolt	M10*20	2
30	Bolt	M10*85	1
31	Adjustable Feet	M8*30	4
32	Nut	M8	4

33	Screw	ST4.2*12	9
34	Rear Stabilizer Front Cover		1
35	Rear Stabilizer Rear Cover		1
36	Sliding Rail Cover		1
37	Bolt	M8*20	4
38	Screw	ST4.2*20	14
39	Front Stabilizer Front Cover		1
40	Front Stabilizer Rear Cover		1
41	Bolt	M6*12 S6	2
42	Bolt	M6*15	2
43	Bearing	608	4
44	Wheel	Φ71*24	2
45	Bolt	M12*25	4
46	Spring Washer	Φ12*Φ20*2.0	4
47	Washer	Φ24*Φ12.5*2	4
48	Left Pedal Assembly		1
49	Right Pedal Assembly		1
50	Pedal Adjustment		2
51	Bolt	M4*6	10
52	Pedal		2
53	Pedal strap		2
54	Bolt	M5*10	5
55	Computer		1
56	Sensor Wire	L=450mm	1
57	Flywheel	4kg	1
58	Belt	PJ260	1
59	Nut	M10*1*B5	2
60	Nut	M10*1.0*9	4
61	Aluminum fixed column		2
62	Washer	φ5*φ12*1.0	2
63	Left Cover		1
64	Right Cover		1
65	Screw	ST4.2*25	10
66	Mesh Belt loop		1
67	Volute Spring Complete sets		1

68	Mesh Belt		1
69	Washer	φ6*φ12*1.5	1
70	Shaft snap ring		2
71	Bearing	6000	2
72	Mesh Belt Pulley		1
73	Belt pulley shaft	M6*60	1
74	Bolt		1
75	Rubber MATS		1
76	Bolt	M8*12	2
77	Mesh Belt fixing seat		1
78	Screw	M4*10	2
79	Bolt	M6*70	1
80	Grip		2
81	End Cap	φ28*1.5	2
82	Motor		1
83	Motor tension wire	L=450mm	1
84	Nut		1
85	Power supply wire	L=450mm	1
86	AC Adapter	L=2000mm	1
87	Extension Sensor Wire	L=800mm	1
88	Allen Wrench	S6	1
89	Spanner	S10,13,14,15	1
90	Spanner	S13,18	1
91	Tablet holder		1
HW	Hardware package		1

9.3 Exploded Drawing

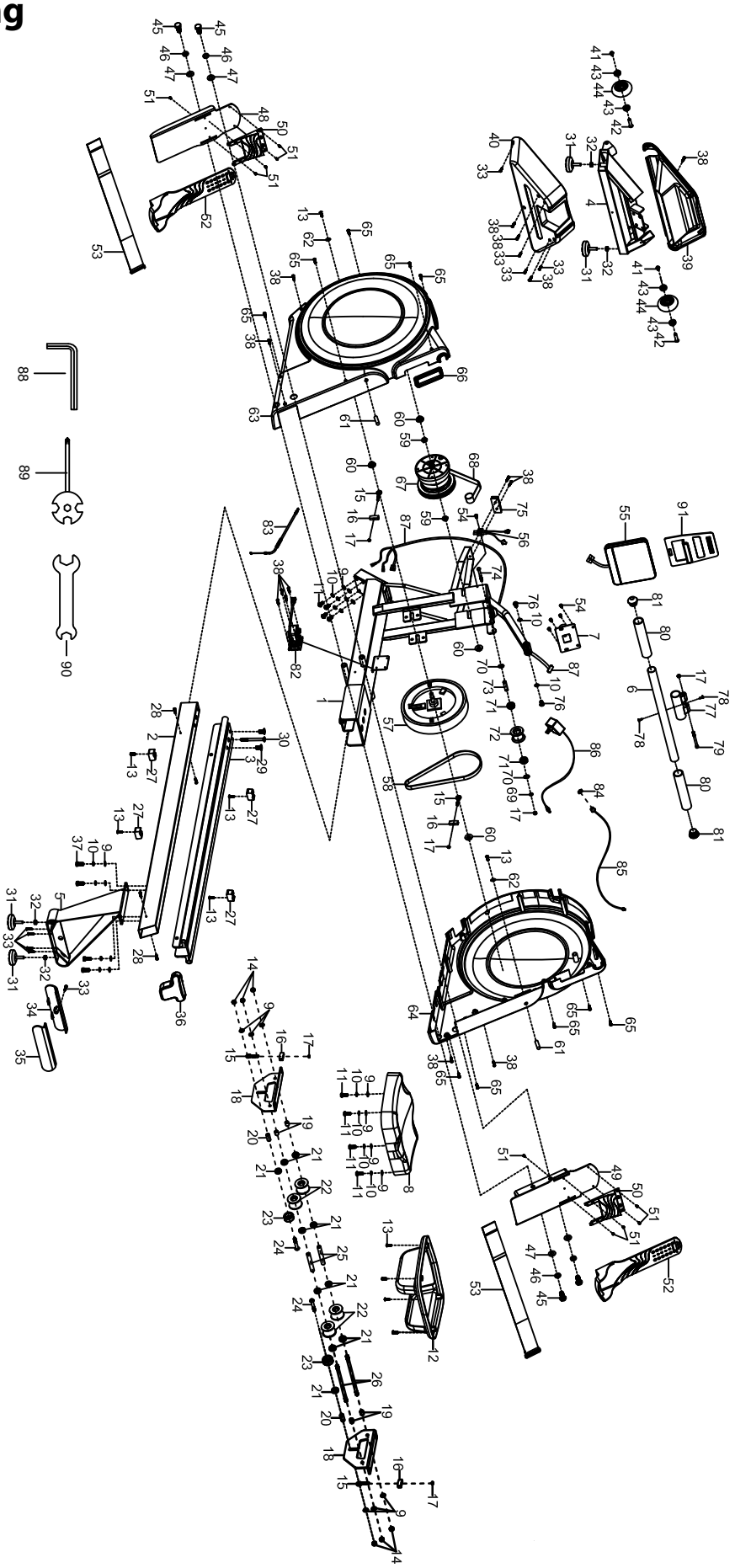

10 WARRANTY

Products from Kettler® are subject to strict quality control. However, if a fitness equipment purchased from us does not work perfectly, we take it very seriously and ask you to contact our customer service as indicated. We are happy to help you by phone via our service hotline.

Error Descriptions
Your fitness equipment is developed for long-term, high-quality training. However, should a problem arise, please first read the operating instructions. For further assistance, please contact your contract partner or call our service hotline. To ensure your problem is solved as quickly as possible, please describe the defect as exactly as possible.

In addition to the statutory warranty, we provide a warranty for every fitness equipment purchased from us according to the following provisions.

Your statutory rights are not affected.

Warrantee
The warrantee is the first/original buyer and/or any person who received a newly purchased product as a gift from the original buyer.

Warranty period
The warranty periods, shown on our web shop, begin on delivery of the fitness equipment. The respective warranty periods for your equipment can be found on its product website.

Repair Costs
According to our choice, there will either be a repair, a replacement of individual damaged parts or a complete replacement. Spare parts, that have to be mounted while assembling the equipment, have to be replaced by the warrantee personally and are not a part of repair. After the expiration of the warranty period, the responsibility for parts costs, repair costs, installation costs and delivery costs lies with the warranty holder.

The terms of use are defined as follows:

+ Home use: solely for private use in private households up to 3 hours per day
+ Semi-professional use: up to 6 hours per day (e. g. rehabilitation centres, hotels, clubs, company gyms)
+ Professional use: more than 6 hours per day (e. g. commercial gyms)

Warranty Service
Within the warranty period, equipment which develops faults as a result of material or manufacturing defects, will be repaired or replaced at our discretion. Ownership of equipment or parts of equipment which have been replaced is transferred to us. The warranty period is not extended nor does a new warranty period begin following repair or replacement under the warranty.

Warranty Conditions
For the warranty to be valid, the following steps must be taken:

Please contact our customer service by email or phone. If the product under warranty has to be sent in for repair, the seller bears costs. After expiry of the warranty, the buyer bears the costs of transport and insurance. If the fault is covered by our warranty, you will receive a new or repaired equipment in return.

Warranty claims are invalid in case of damage resulting from:

+ misuse or improper handling
+ environmental influences (moisture, heat, electrical surge, dust, etc.)
+ failure to follow the current safety measures for the equipment
+ failure to follow the operating instructions
+ use of force (e. g. hitting, kicking, falling)
+ interventions which were not carried out by one of our authorized service centres
+ unauthorised repair attempts

Proof of Purchase and Serial Number
Please make sure that you are able to provide the appropriate receipt when claiming on your warranty. So that we can clearly identify the model of your equipment, and for the purposes of our quality control, you will need to give the serial number of your equipment, when contacting the service team. Where possible please have your serial number and your customer number ready when you call our service hotline. It will help us to deal with your request swiftly.

If you cannot find the serial number on your fitness equipment, our service team is at your disposal to offer further information.

Service outside of the Warranty Period
We are also happy to issue an individual cost estimate if there is a problem with your fitness equipment after the warranty has expired, or in cases which do not fall under the terms of the warranty, e. g. normal wear and tear. Please contact our customer service team to find a quick and cost-effective solution to your problem. In such a case you will be responsible for the delivery costs.

Communication
Many problems can be solved just by speaking to us as your specialist supplier. We know how important it is to you as a user of the fitness equipment to have problems solved quickly and simply, so you can enjoy working out with minimal interruption. For that reason, we also want to resolve your queries quickly and in a straightforward manner. Thus, please always keep your customer number and the serial number of the faulty equipment handy.

11 CONTACT

DE

TECHNIK

+49 4621 4210-900
+49 4621 4210-698
technik@fitshop.de
Öffnungszeiten entnehmen Sie unserer Homepage.

SERVICE

0800 20 20277 (kostenlos)
04621 4210 - 0
info@fitshop.de
Öffnungszeiten entnehmen Sie unserer Homepage: https://stg.fit/statita

DK

TEKNIK OG SERVICE

80 90 16 50
+49 4621 4210-945
info@fitshop.dk
Åbningstider kan findes på hjemmesiden: https://stg.fit/statit7

EN

CUSTOMER SUPPORT

00800 2020 2772
+494621 4210 944
service@fitshop.com
You can find the opening hours on our homepage: https://fsg.fit/en

FR

TECHNIQUE & SERVICE

+33 (0) 189 530984
+49 4621 42 10 933
info@fitshop.fr
Vous trouverez les heures d'ouverture sur notre site Internet: https://stg.fit/statit4

BE

TECHNIQUE & SERVICE

02 732 46 77
+49 4621 4210 933
info@fitshop.be
Vous trouverez les heures d'ouverture sur notre site Internet: https://stg.fit/statit8

ES

TECNOLOGÍA Y SERVICIOS

938 805 790
info@fitshop.es
Consulta nuestro horario de apertura en la página web: https://stg.fit/statit5

NL

TECHNISCHE DIENST & SERVICE

+31 172 619961
service@fitshop.nl
De openingstijden vindt u op onze homepage: https://stg.fit/statit3

INT

TECHNICAL SUPPORT & SERVICE

+49 4621 4210-944
service-int@fitshop.de
You can find the opening hours on our homepage: https://stg.fit/statita

PL

DZIAŁ TECHNICZNY I SERWIS

22 307 43 21
+49 4621 42 10-948
info@fitshop.pl
Godziny otwarcia można znaleźć na stronie głównej: https://stg.fit/statit6

AT

TECHNIK & SERVICE

0800 20 20277 (Freecall)
+49 4621 42 10-0
info@fitshop.at
Öffnungszeiten entnehmen Sie unserer Homepage: https://stg.fit/statitb

CH

TECHNIK & SERVICE

0800 202 027
+49 4621 42 10-0
info@fitshop.ch
Öffnungszeiten entnehmen Sie unserer Homepage: https://stg.fit/statit9

Please find a detailed overview including address and opening hours for all stores of the Fitshop Group in Germany and abroad on the following website:

www.fitshop.com/en/stores

KETTLER

COACH 400