NordicTrack®

Tour de France

Model No. NTEXTDF25-INT.0
Serial No. _____

Write the serial number in the space above for reference.

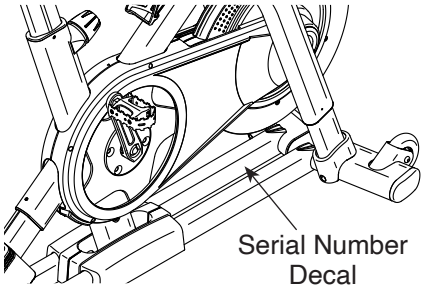

UNITED KINGDOM
Website: iconsupport.eu
E-mail: csuk@iconeurope.com
Write:
ICON Health & Fitness, Ltd.
Unit 4, Westgate Court
Silkwood Park
OSSETT
WF5 9TT
UNITED KINGDOM

AUSTRALIA
Call: 1800 993 770
E-mail: australiacc@iconfitness.com
Write:
iFIT Inc.
PO Box 635
WINSTON HILLS NSW 2153
AUSTRALIA

⚠ CAUTION

Read all precautions and instructions in this manual before using this equipment. Keep this manual for future reference.

USER'S MANUAL

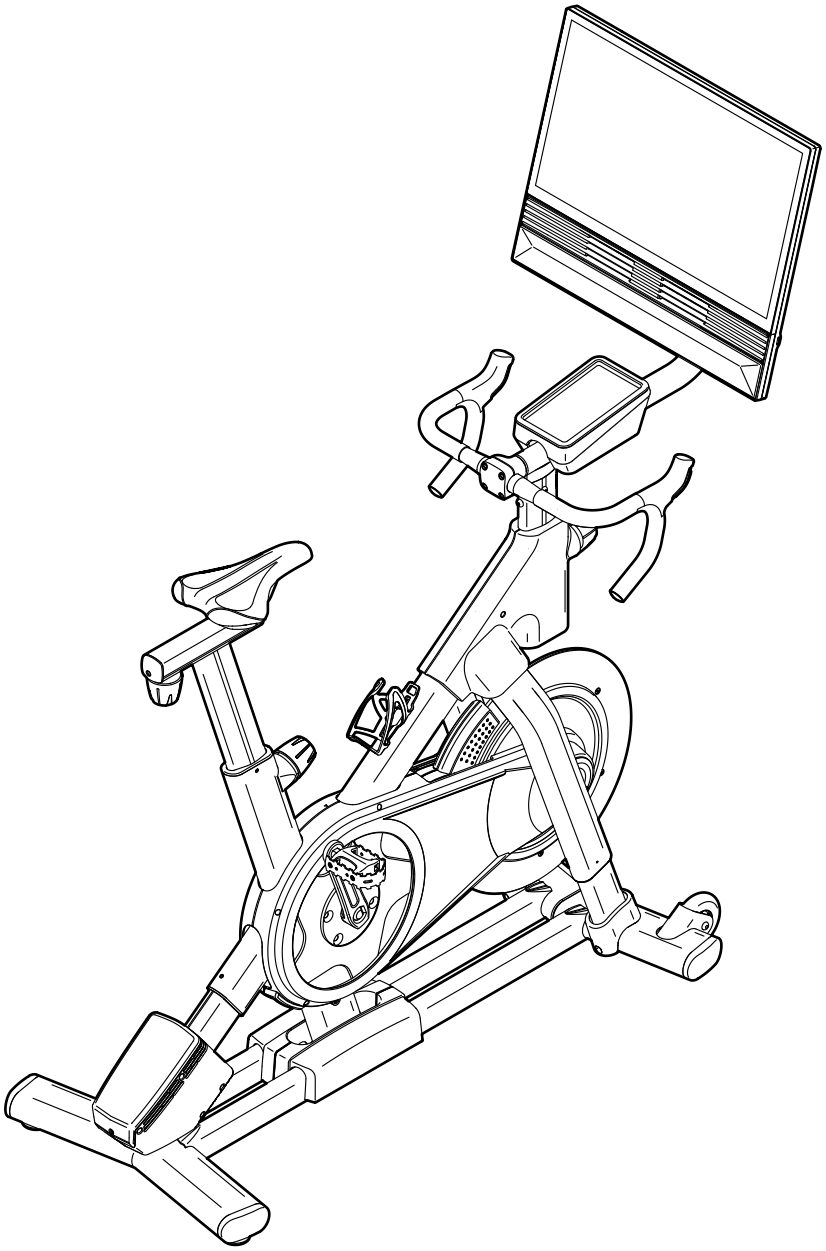

iconeurope.com

TABLE OF CONTENTS

WARNING DECAL PLACEMENT 2
IMPORTANT PRECAUTIONS 3
BEFORE YOU BEGIN 4
PART IDENTIFICATION CHART 5
ASSEMBLY 6
HOW TO USE THE STUDIO CYCLE 13
HOW TO USE THE CONSOLE 15
MAINTENANCE AND TROUBLESHOOTING 24
EXERCISE GUIDELINES 28
PART LIST 31
EXPLODED DRAWING 33
ORDERING REPLACEMENT PARTS . . . . . Back Cover
RECYCLING INFORMATION . . . . . Back Cover
UK/EU DECLARATION OF CONFORMITY . . . . . Back Cover

WARNING DECAL PLACEMENT

This drawing shows the location(s) of the warning decal(s). **If a decal is missing or illegible, see the front cover of this manual and request a free replacement decal. Apply the decal in the location shown.** Note: The decal(s) may not be shown at actual size.

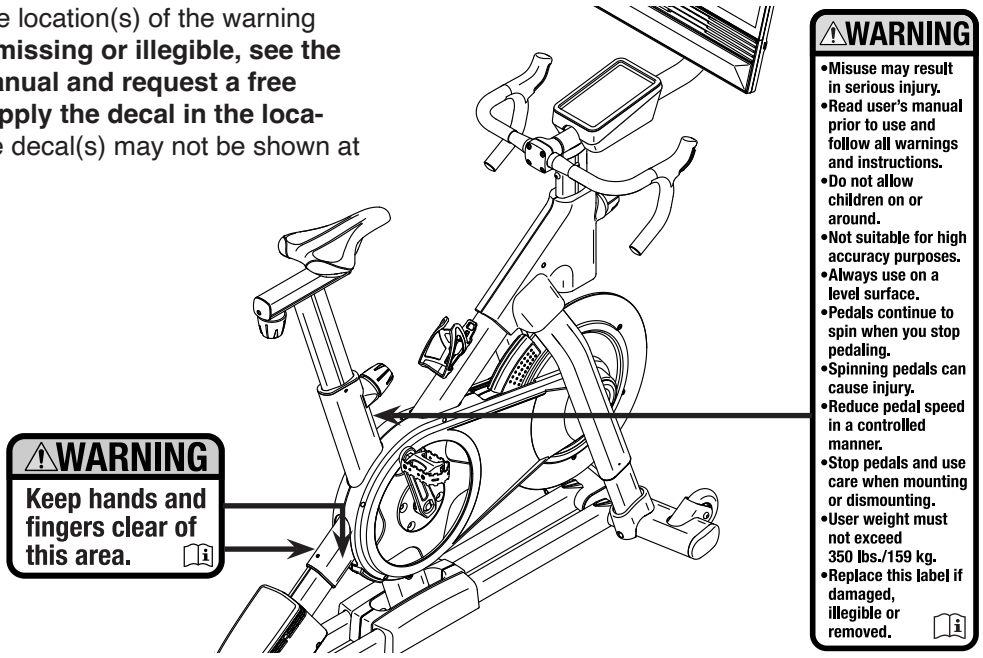

NORDICTRACK and IFIT are registered trademarks of iFIT Inc. The Bluetooth® word mark and logos are registered trademarks of Bluetooth SIG, Inc. and are used under license. Google Maps is a trademark of Google LLC. Wi-Fi is a registered trademark of Wi-Fi Alliance. WPA and WPA2 are trademarks of Wi-Fi Alliance.

IMPORTANT PRECAUTIONS

⚠ WARNING: To reduce the risk of serious injury, read all important precautions and instructions in this manual and all warnings on your studio cycle before using your studio cycle. iFIT assumes no responsibility for personal injury or property damage sustained by or through the use of this product.

1. It is the responsibility of the owner to ensure that all users of the studio cycle are adequately informed of all precautions.
2. Keep children under age 16 and pets away from the studio cycle at all times.
3. Consult your health care provider before beginning any exercise program. This is especially important for persons over age 35 or persons with pre-existing health problems.
4. Consult your health care provider before beginning or continuing any exercise program during pregnancy. Use the studio cycle only as authorized by your health care provider.
5. The studio cycle is not intended for use by persons with reduced physical, sensory, or mental capabilities or lack of experience and knowledge, unless they are given supervision or instruction about the use of the studio cycle by someone responsible for their safety.
6. Use the studio cycle only as described in this manual.
7. The studio cycle is intended for home use only. Do not use the studio cycle in a commercial, rental, or institutional setting.
8. Keep the studio cycle indoors, away from moisture and dust. Do not put the studio cycle in a garage or covered patio, or near water.
9. Place the studio cycle on a level surface, with a mat beneath it to protect the floor or carpet. Make sure that there is at least 2 ft. (0.6 m) of clearance around the studio cycle.
10. Inspect and properly tighten all parts each time the studio cycle is used. Replace any worn parts immediately. Use only manufacturer-supplied parts.
11. Always plug the power adapter into the studio cycle before you plug it into an outlet.
12. The studio cycle should not be used by persons weighing more than 350 lbs. (159 kg).
13. Wear appropriate clothes while exercising; do not wear loose clothes that could become caught on the studio cycle. Always wear athletic shoes for foot protection.
14. Be careful when mounting and dismounting the studio cycle.
15. Always keep your back straight while using the studio cycle; do not arch your back.
16. Over exercising may result in serious injury or death. If you feel faint, if you become short of breath, or if you experience pain while exercising, stop immediately and cool down.

BEFORE YOU BEGIN

Thank you for selecting the revolutionary NORDICTRACK® TOUR DE FRANCE studio cycle. The studio cycle is unlike any ordinary exercise bike. With full adjustability, an interactive wireless touch-screen console, an incline system that simulates real-world terrain, and an array of other features, the TOUR DE FRANCE studio cycle provides an immersive in-home studio cycling experience.

For your benefit, read this manual carefully before you use the studio cycle. If you have questions after reading this manual, please see the front cover of this manual. To help us assist you, note the product model number and serial number before contacting us (see the front cover of this manual).

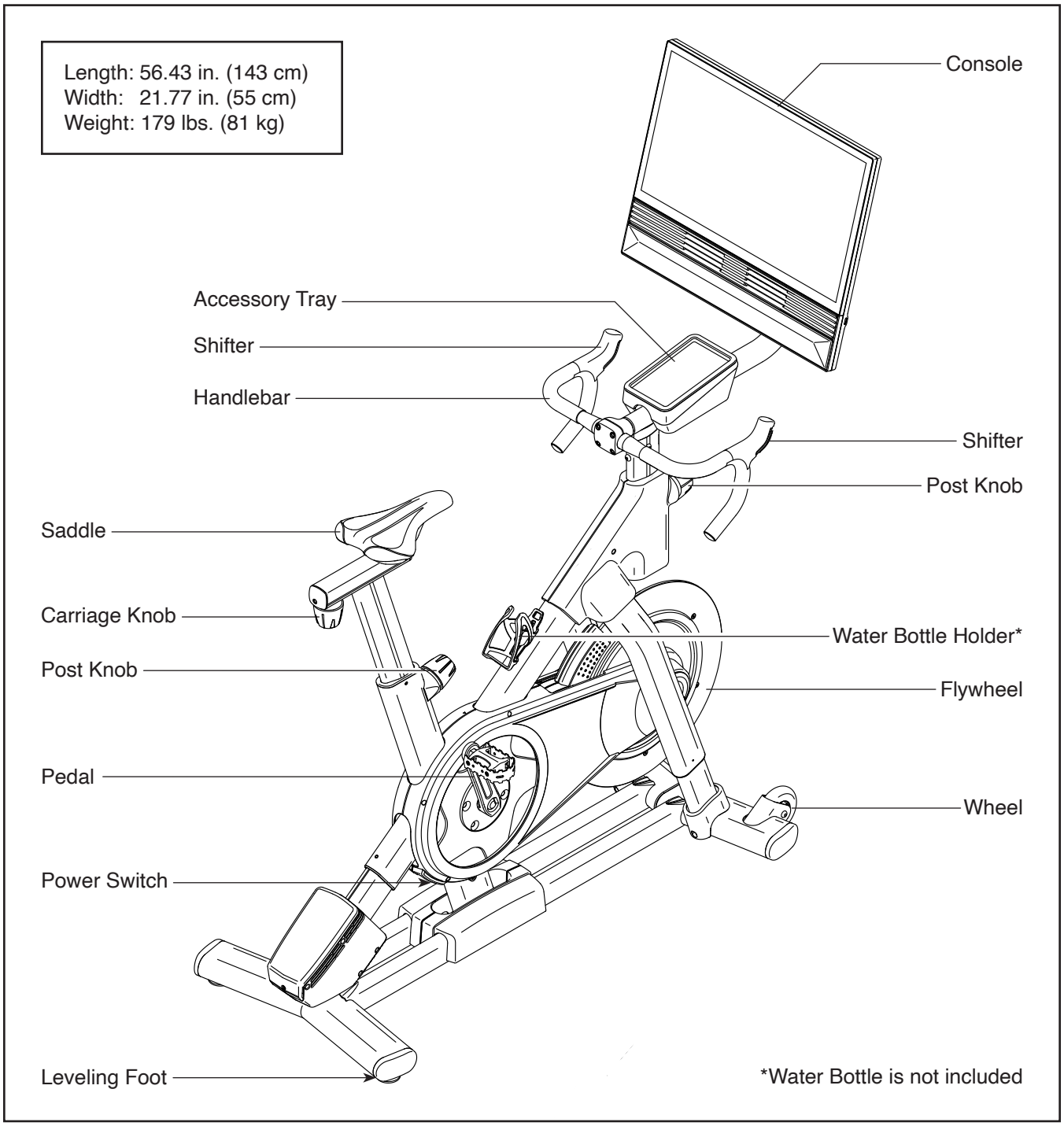

PART IDENTIFICATION CHART

Use the drawings below to identify the small parts used for assembly. The number in parentheses below each drawing is the key number of the part, from the PART LIST near the end of this manual. The number after the key number is the quantity used for assembly. **Note: If a part is not in the hardware kit, check to see whether it has been preassembled. Extra parts may be included.**

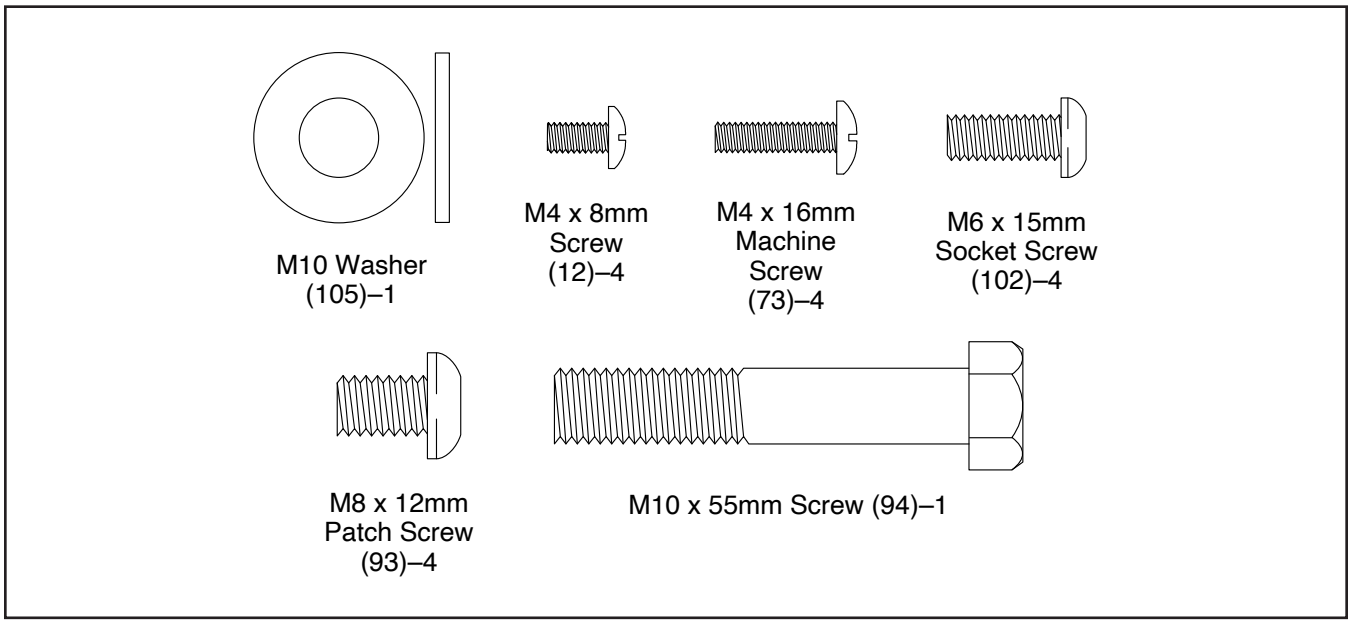

ASSEMBLY

- Assembly requires two persons.
- Place all parts in a cleared area and remove the packing materials. Do not dispose of the packing materials until you complete all assembly steps.
- To identify small parts, see page 5.
- Assembly can be completed using the included tools. To avoid damaging parts, do not use power tools.
- **Save the included tools.** One or more of the tools may be needed to make adjustments in the future.

1. **To register your product and activate your warranty in the UK,** go to iFITsupport.eu. If you do not have internet access, complete the warranty registration card in the warranty booklet and send it by registered post to the address on the back cover of the warranty booklet.

   To register your product and activate your warranty in Australia, email or post the following information to the email address or postal address on the front cover of this manual.
   - your receipt (make sure to keep a copy)
   - your name, address, and telephone number
   - the model number, serial number, and name of your product (see the front cover of this manual)

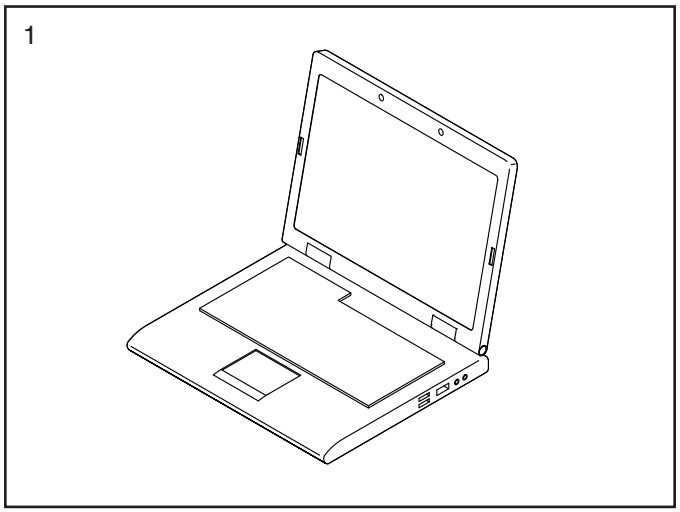

2. Orient the Handlebar Post (7) so that the lower slot (A) is on the side shown.

   Next, loosen the indicated Post Knob (100) and insert the Handlebar Post (7) into the Frame (1).

   See the inset drawing. Position the Handlebar Post (7) so that the bottom of the Handlebar Post is even with the bottom of the post tube (B) on the Frame (1). Then, tighten the Post Knob (100).

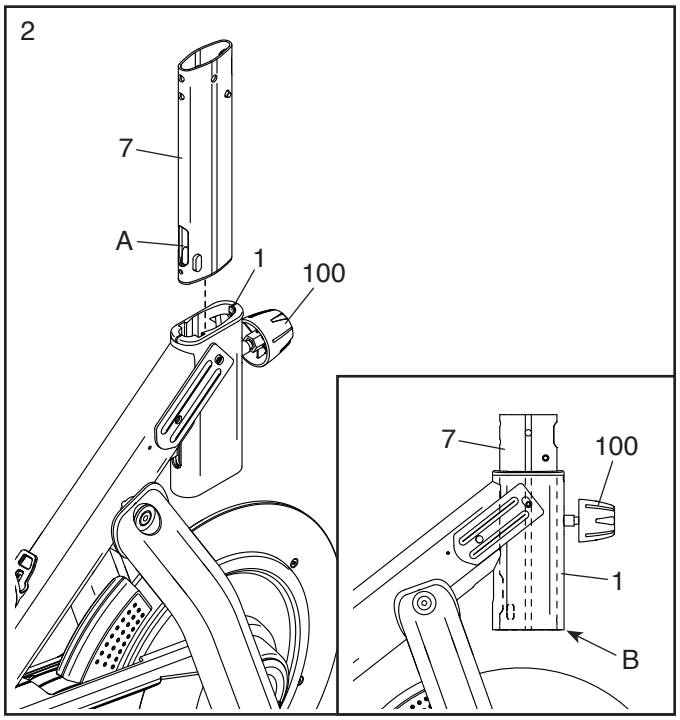

3. Identify the included wire tool (C) and insert it downward into the Handlebar Post (7) so that the loop on the wire tool is extending from the lower slot (A).

   Next, hook the tie (D) on the Lower Wire (122) onto the loop on the wire tool (C). Then, pull the wire tool upward until the end of the Lower Wire is at the top of the Handlebar Post (7).

   Then, unhook the tie (D) from the wire tool (C), and push the end of the Lower Wire (122) out of the upper slot (E) in the Handlebar Post (7) as shown in the inset drawing.

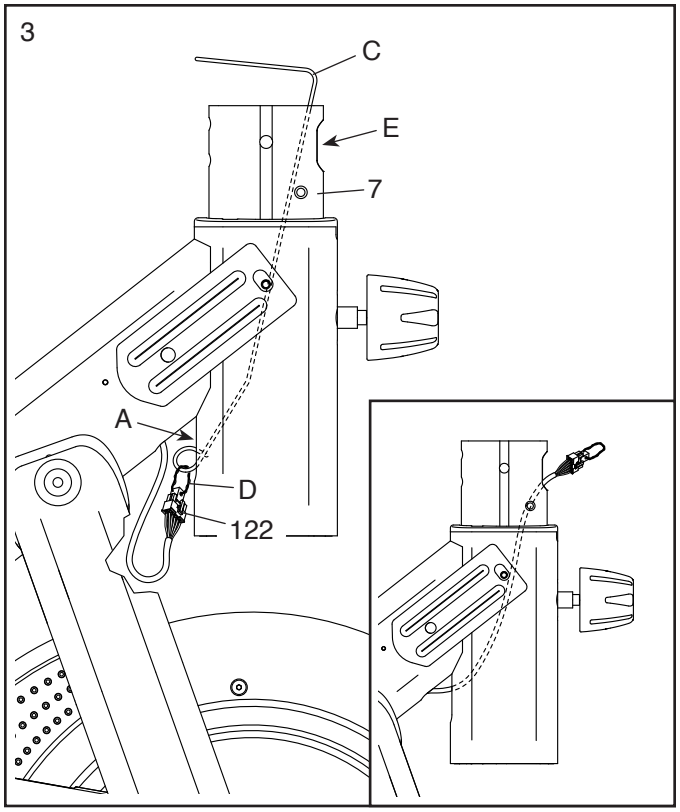

4. Insert the Handlebar Bracket (23) into the Handlebar Post (7). Attach the Handlebar Bracket with four M8 x 12mm Patch Screws (93); **start all four Patch Screws, and then firmly tighten them.**

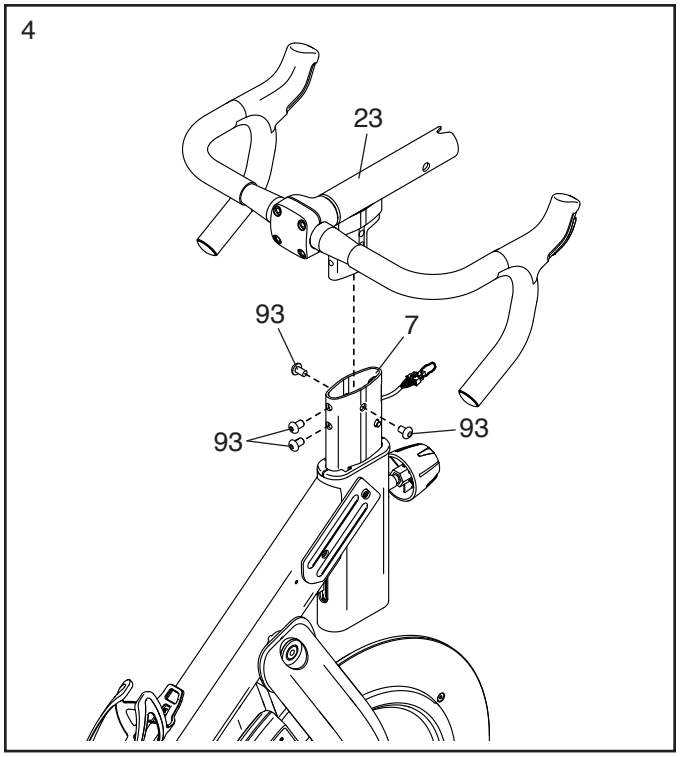

5. **Hold the Handlebar (97) firmly with one hand,** and remove the indicated Post Knob (100).

   Then, attach the Right Upper Shield (40) to the Frame (1) with two M4 x 8mm Screws (12); **do not fully tighten the Screws yet.**

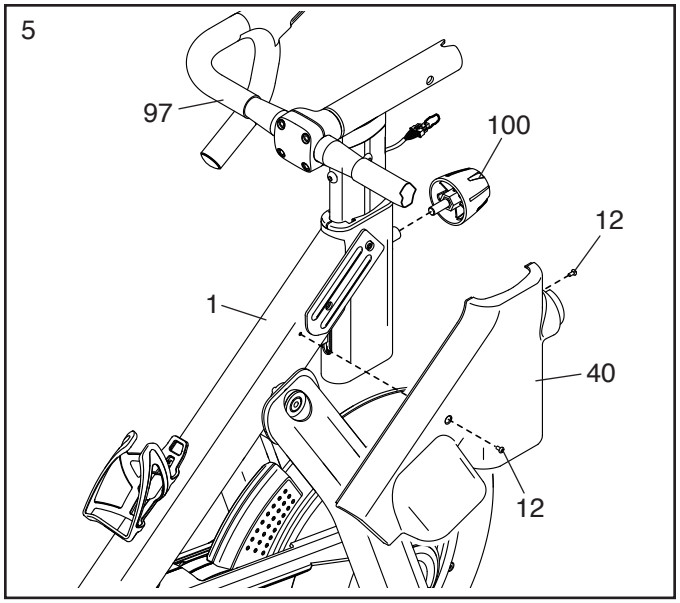

6. Attach the Left Upper Shield (141) to the Frame (1) with two M4 x 8mm Screws (12).

   See step 5. Tighten the two M4 x 8mm Screws (12) in the Right Upper Shield (40). Then, reattach and tighten the Post Knob (100).

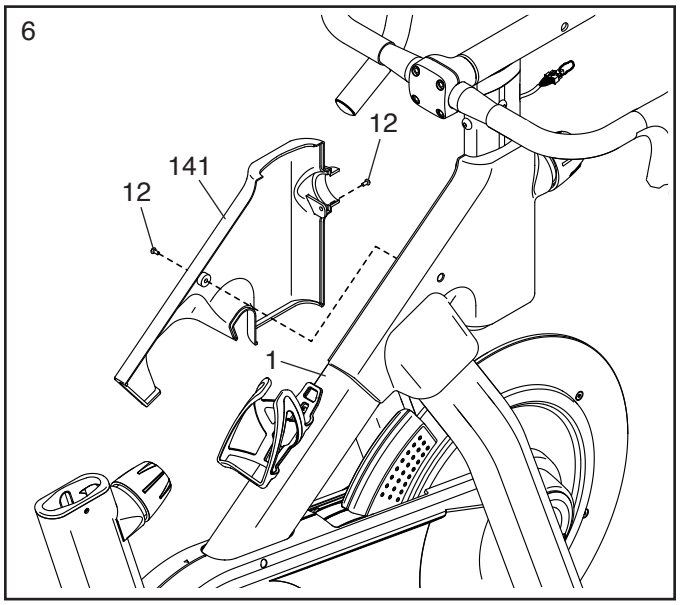

7. Pull the wires (F) out of the Console Support (8).

   Then, press the Mount Cover (144) onto the Console Support (8).

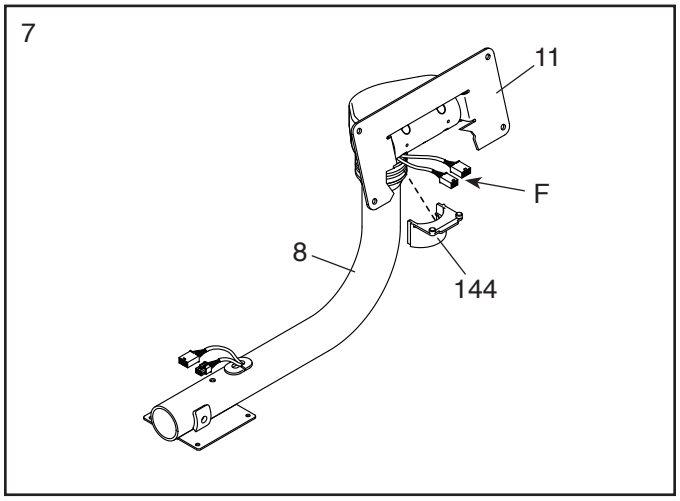

8. Slide the Console Support (8) onto the Handlebar Bracket (23). Attach the Console Support with an M10 x 55mm Screw (94) and an M10 Washer (105); **do not fully tighten the Screw yet.**

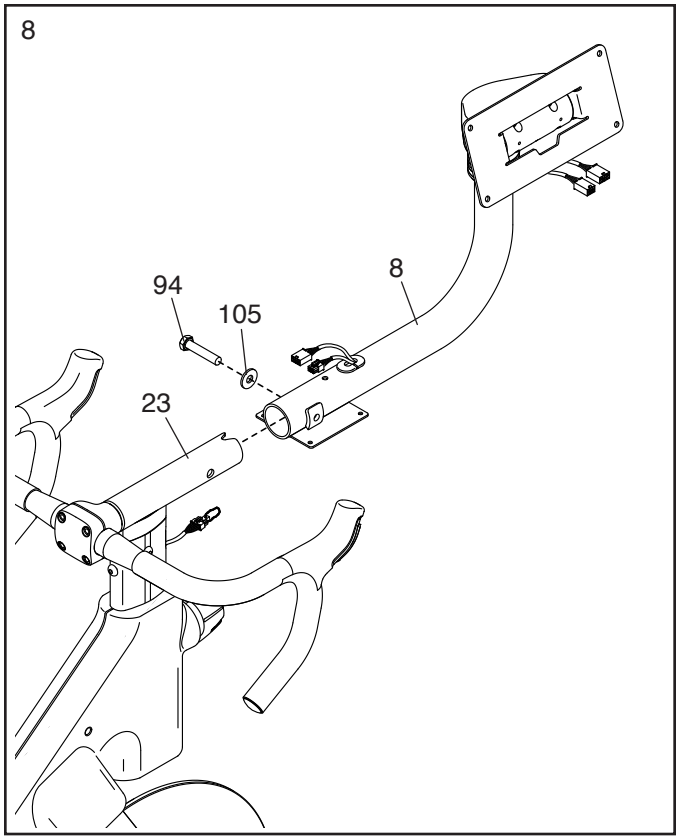

9. **See the inset drawing.** Press the small latch (G) on the connector on the Lower Wire (122), and remove and discard the wire pull (H) and the tie (D).

   Next, connect the Lower Wire (122) to the Upper Wire (123), and connect the Control Wire (125) to the Extension Wire (124).

   IMPORTANT: The wire connectors should slide together easily and snap into place with an audible click. You must connect the connectors properly for your studio cycle to function properly.

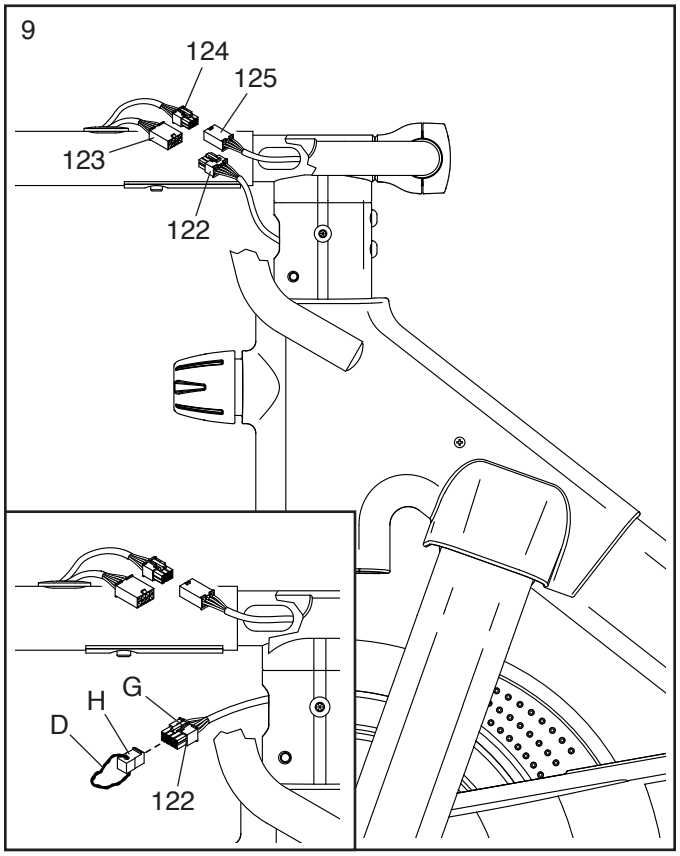

10. **See the inset drawing.** Route the Upper Wire (123) and the Extension Wire (124) upward through the Console Bracket (11).

Next, have a second person hold the Console (10) near the Console Bracket (11). Connect the two console wires (I) to the Upper Wire (123) and the Extension Wire (124).

IMPORTANT: The wire connectors should slide together easily and snap into place with an audible click. You must connect the wires properly for your studio bike to function properly.

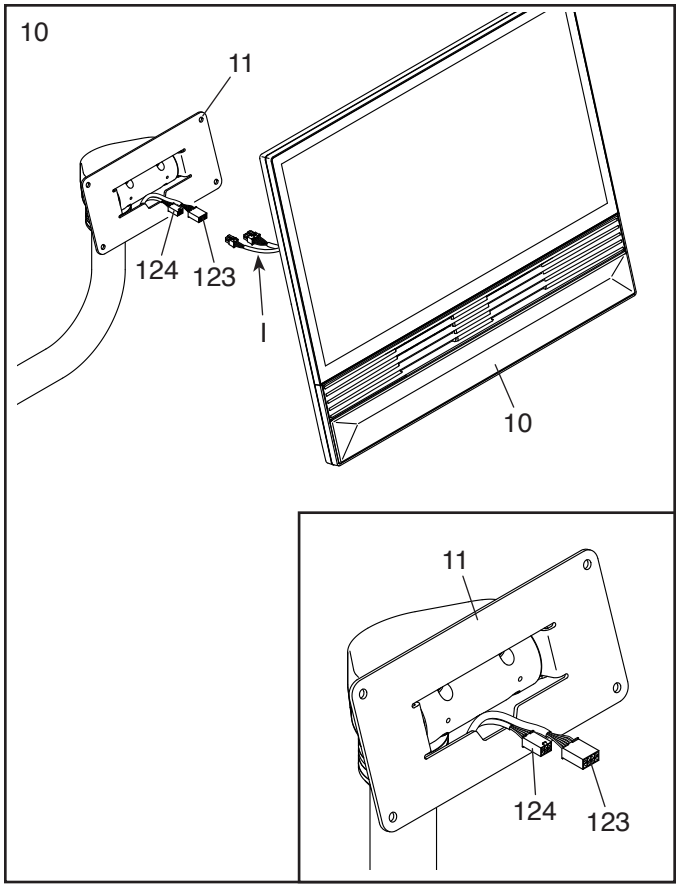

11. **Insert the wire connectors and the excess wire into the Console (10).**

Do not pinch the wires. Attach the Console (10) to the Console Bracket (11) with four M6 x 15mm Socket Screws (102); **start all four Socket Screws, and then tighten them.**

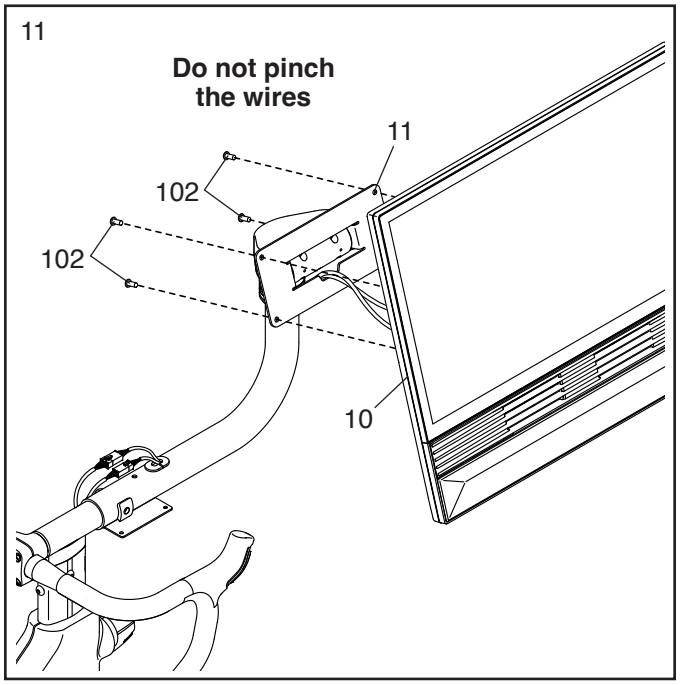

12. Identify the **Lower Console Cover (145)**, and press it onto the back of the Console (10).

Do not pinch the wires. Press the **Upper Console Cover (146)** onto the back of the Console (10).

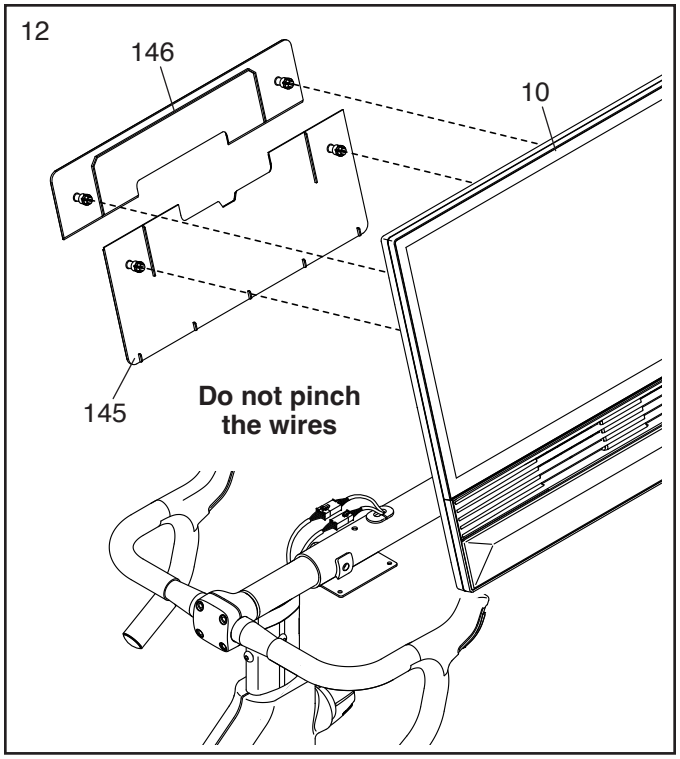

13. Hold the sides of the Console (10) and rotate it to the position shown.

See the inset drawing. If the Console (10) is not level from side to side, have a second person tip it slightly until it is level. While the second person holds the Console, firmly tighten the M10 x 55mm Screw (94) that you started in step 8.

Do not pinch the wires. Set the Tray Base (14) on the Console Support (8). Next, set the Accessory Tray (38) on the Tray Base. Then, attach both parts with four M4 x 16mm Machine Screws (73); **start all four Machine Screws, and then tighten them.**

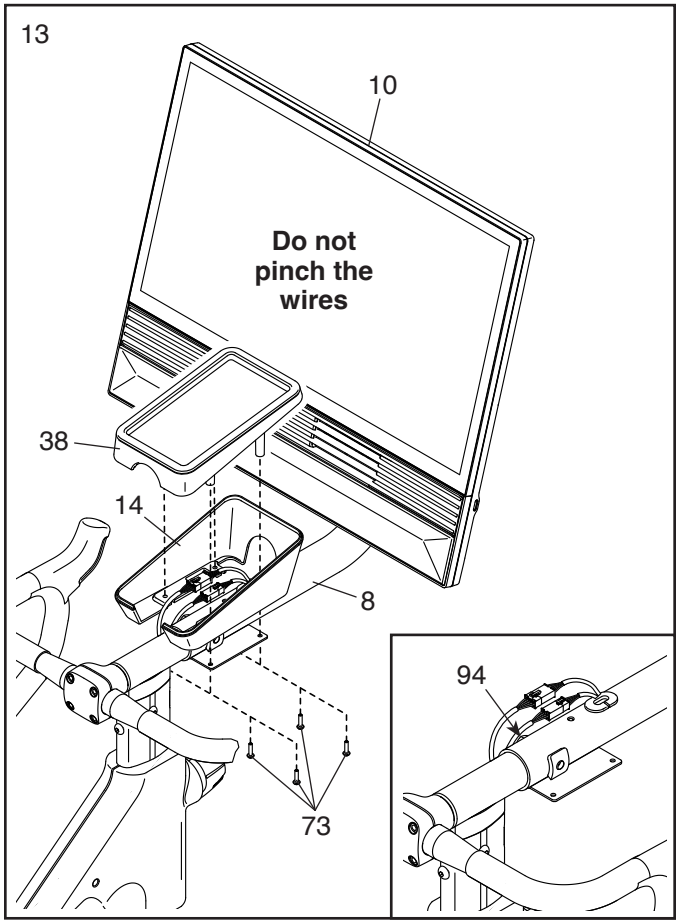

14. Loosen the indicated Post Knob (100), and insert the Saddle Post (13) into the Frame (1). Then, slide the Saddle Post to the desired height, and tighten the Post Knob.

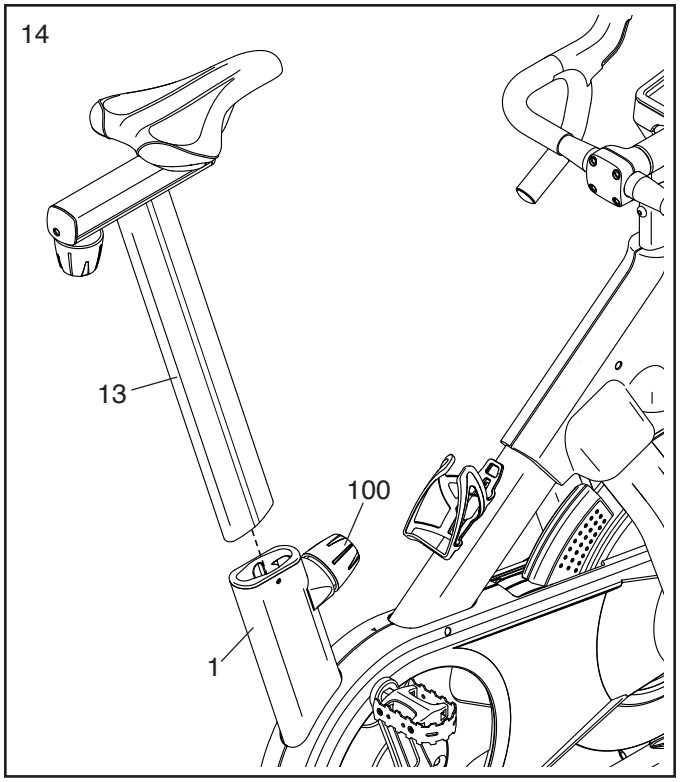

15. **IMPORTANT: Always plug the Power Adapter (119) into the studio cycle before you plug it into an outlet.** Plug the Power Adapter into the receptacle on the rear of the studio cycle.

    Note: To plug the Power Adapter (119) into an outlet, see page 13.

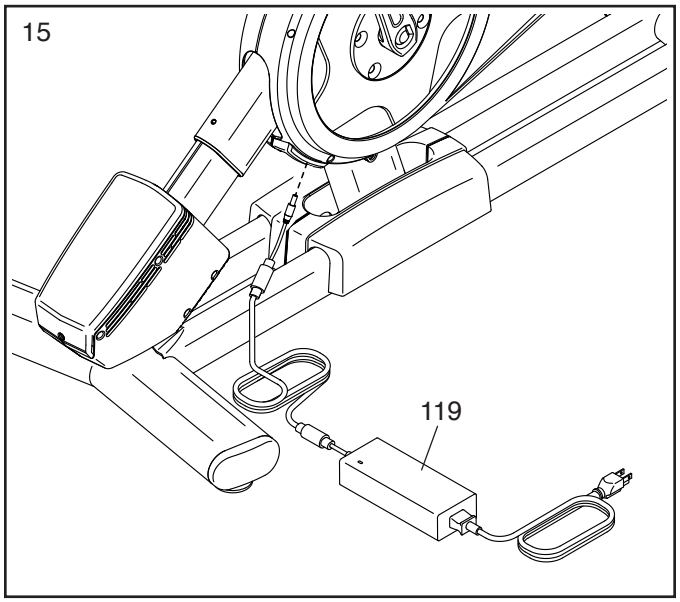

16. **Make sure that all parts are properly tightened before the studio cycle is used.** Place a mat beneath the studio cycle to protect the floor. **IMPORTANT: Keep the included tools. You may need them for future adjustment and maintenance of your studio cycle.**

HOW TO USE THE STUDIO CYCLE

HOW TO PLUG IN THE POWER ADAPTER

IMPORTANT: If the studio cycle has been exposed to cold temperatures, allow it to warm to room temperature before you plug in the power adapter (A). If you do not do this, you may damage the console displays or other electronic components.

IMPORTANT: Always plug the power adapter (A) into the studio cycle before you plug it into an outlet.

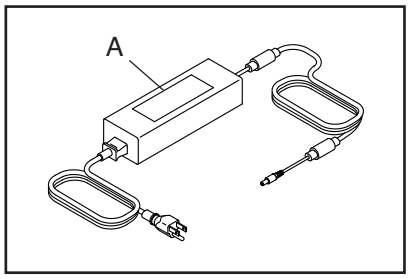

Make sure that the power adapter (A) is plugged into the receptacle on the studio cycle. Then, plug the power adapter into an appropriate outlet that is properly installed in accordance with all local codes and ordinances.

HOW TO LEVEL THE STUDIO CYCLE

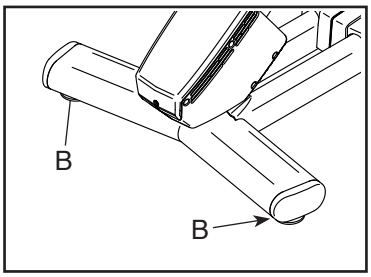

If the studio cycle rocks slightly on your floor during use, turn one or both of the leveling feet (B) beneath the rear stabilizer until the rocking motion is eliminated.

FEATURES OF THE STUDIO CYCLE

Measuring Watts

Each studio cycle is calibrated to measure your power output and to allow you to monitor your watts and RPMs directly on the console. By monitoring your watts and RPMs, you can see how hard you are training and make sure that you are challenging yourself and improving.

The studio cycle also features a watts program that automatically changes gears to keep your watts level within a preset range.

The Incline System

The studio cycle can incline and decline to realistically simulate outdoor terrain. When you use map workouts of training routes with iFIT® (see the console instructions beginning on page 19 for more information), the studio cycle will automatically incline and decline to match the real-world terrain.

Interactive Wireless Touchscreen Console

The wireless touchscreen console works with iFIT to provide an interactive and immersive in-home studio experience that allows you to participate virtually in group studio classes led by personal trainers and to experience workouts around the world.

HOW TO ADJUST THE GEOMETRY OF THE STUDIO CYCLE

The studio cycle can be adjusted to match the geometry of your road bike to promote correct form and to ensure proper training of the muscles. **Make adjustments in small increments, and then pedal the studio cycle to test the adjustments.**

How to Adjust the Angle of the Saddle

You can adjust the angle of the saddle to the position that is most comfortable.

To adjust the angle of the saddle, loosen the indicated screw (C) beneath the saddle, tilt the saddle upward or downward slightly, and then tighten the screw.

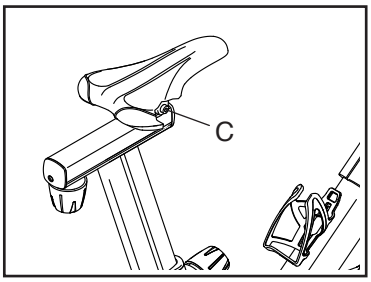

Note: You can remove the saddle and attach your own saddle to the studio cycle if desired.

How to Adjust the Horizontal Position of the Saddle

To adjust the position of the saddle, loosen the carriage knob (D), move the carriage forward or backward to the desired position, and then firmly tighten the carriage knob.

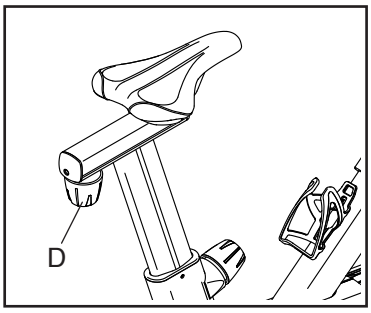

How to Adjust the Height of the Saddle

For effective training, the saddle should be at the proper height. As you pedal, there should be a slight bend in your knees when the pedals are in the lowest position.

To adjust the height of the saddle, loosen the post knob (E), slide the saddle post upward or downward, and then **firmly tighten** the post knob. **IMPORTANT: Do not raise the saddle post beyond the "MAX" mark on the saddle post.**

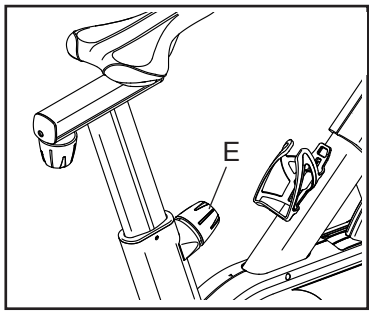

How to Adjust the Height of the Handlebar

To adjust the handlebar (F), **hold the handlebar firmly with one hand,** and loosen the post knob (E). Then, slide the handlebar post upward or downward, and **firmly tighten** the post knob. **IMPORTANT: Do not raise the handlebar post beyond the "MAX" mark on the handlebar post.**

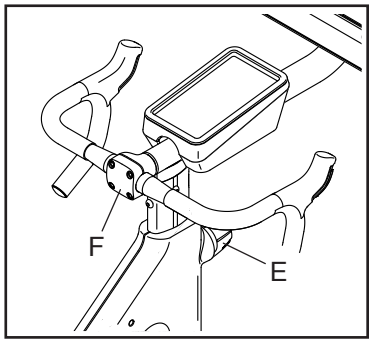

How to Adjust the Position of the Console

The console (G) can be tilted upward and downward and can also be pivoted to the side so that you can view it while standing and performing floor exercises. To adjust the position of the console, hold the sides of the console and press it to the desired position. Note: If the console does not stay in place when it is adjusted, see page 27.

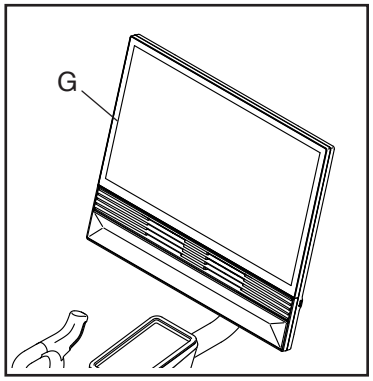

HOW TO USE THE CONSOLE

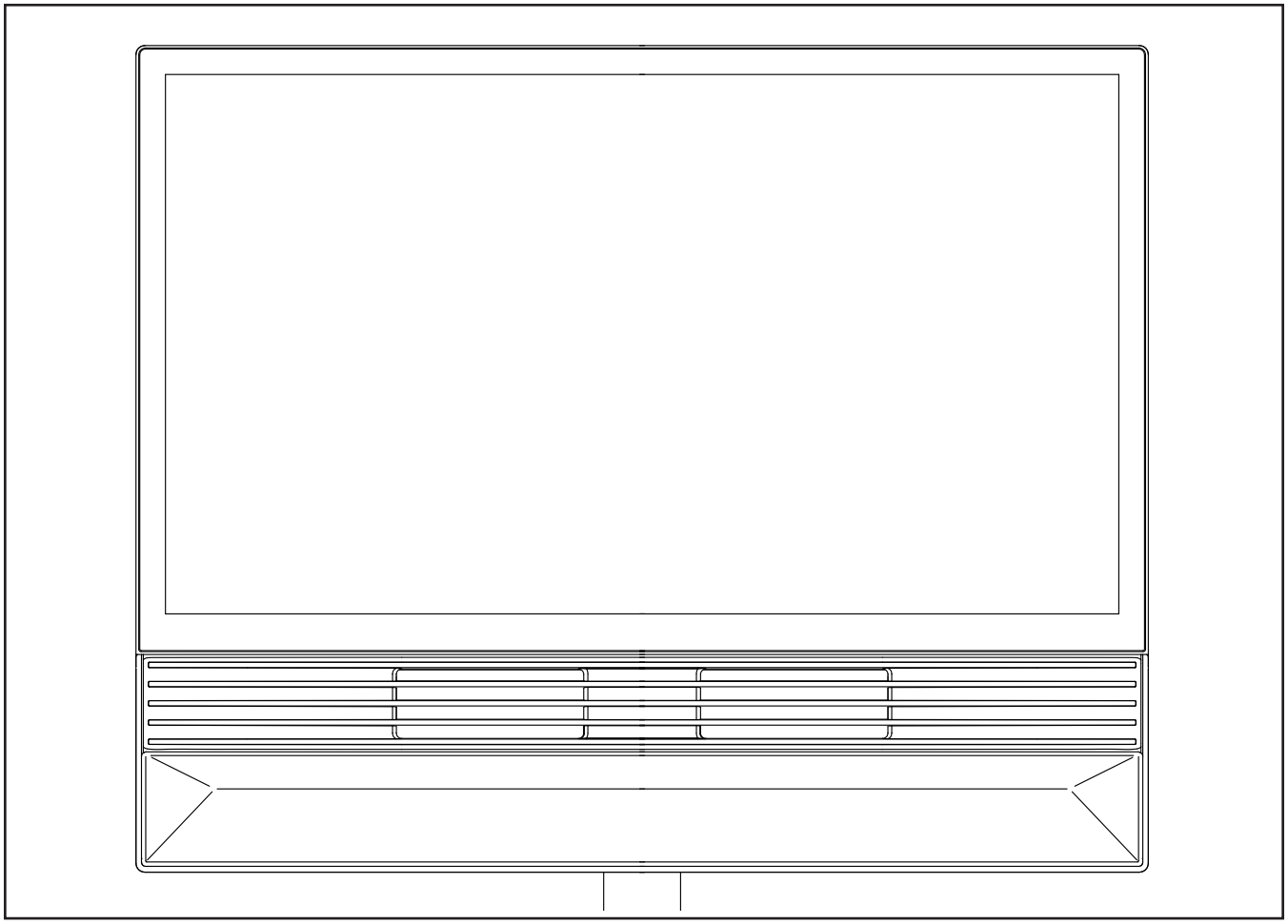

FEATURES OF THE CONSOLE

IMPORTANT: iFIT will periodically update your console's software to improve your workout experience. After a software update, some settings and features described in this manual may no longer apply to your console, and your console may have new settings and features. Take time to explore your console's settings and features. **If you have questions, please visit my.iFIT.com or contact Member Care.**

The advanced console offers a selection of features designed to make your workouts more effective and exciting.

When you use the manual mode of the console, you can change gears and change the incline of the frame with a touch of a button. As you exercise, the console will display instant exercise feedback.

The console also features wireless technology that enables the console to connect to iFIT®. With iFIT, you can choose from a changing selection of featured workouts that automatically control the incline of the frame as iFIT trainers guide you through immersive exercise sessions.

With an iFIT subscription, you can access a library of thousands of on-demand destination and studio workouts, create your own workouts, track your workout results, and access many other features. Go to iFIT.com to learn more.

HOW TO TURN ON THE CONSOLE

The included power adapter must be used to operate the studio cycle. See HOW TO PLUG IN THE POWER ADAPTER on page 13.

When the power adapter is plugged in, press the power switch (A) located on the frame of the studio cycle to turn on the console. It will take a moment for the console to be ready for use. **If the console is inactive, simply touch the screen to activate the console.**

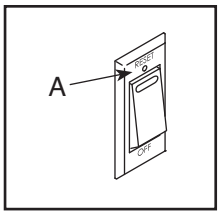

Note: When you turn on the console for the first time, the incline system may calibrate automatically. The frame will move upward and downward as it calibrates. When the frame stops moving, the incline system is calibrated. **IMPORTANT: If the incline system does not calibrate automatically, see step 5 on page 21 and manually calibrate the incline system.**

HOW TO TURN OFF THE CONSOLE

If the pedals do not move for several seconds, the console will pause.

If the pedals do not move for several minutes and the screen is not touched, the console will become inactive.

When you are finished exercising, press the power switch and unplug the power adapter. **IMPORTANT: If you do not do this, the electrical components on the studio cycle may wear prematurely.**

HOW TO USE THE TOUCH SCREEN

The console features a full-color touch screen. You can slide or flick your finger against the screen to move some images on the screen. Note: The screen is not pressure sensitive; you do not need to press hard.

To type information into a text box, touch the text box to view the keyboard. To use numbers or other characters, touch *?123*. To view more characters, touch *~[<*. To return to the letter keyboard, touch ABC. To use a capital character, touch the shift button (upward-facing arrow symbol). To clear text, touch the clear button (backward-facing arrow with an X).

HOW TO SET UP THE CONSOLE

Before you use the studio cycle for the first time, set up the console.

1. **Choose your time zone.**

2. **Connect to a wireless network.**

   To use iFIT workouts and several other features of the console, the console must be connected to a wireless network. If necessary, see page 22 for detailed instructions.

3. **Create or sign in to your iFIT account.**

   Follow the prompts on the screen to create an iFIT account or to log in to your iFIT account. Available subscription options will be shown.

4. **Check for software updates.**

   Touch the console settings button (gear icon) on the screen. Next, touch *Equipment* and then touch *Software update*. **IMPORTANT: To avoid damaging the studio cycle, do not press the power switch or unplug the power adapter while the software is being updated.** See page 21 for detailed instructions.

The console is now ready for you to begin working out. Take some time to explore the console.

HOW TO USE THE MANUAL MODE

1. **Select the home screen.**

   When you turn on the console, the home screen will appear after the console boots up. If you have already selected a workout, touch the screen and follow the prompts to end the workout and return to the home screen.

2. **Get ready for the workout.**

   To use the fan, your Bluetooth headphones, or a compatible heart rate monitor, see page 23.

3. **Start the workout.**

   Touch *Quick start* and begin pedaling.

4. **Shift gears as desired.**

   The studio cycle is designed to simulate a road bike or a mountain bike. As you shift to a higher gear or increase the incline of the frame, the pedaling resistance will increase. As you shift to a lower gear or decrease the incline of the frame, the pedaling resistance will decrease.

   To change the front gears, press the upper or lower button on the left shifter (B). To change the rear gears, press the upper or lower button on the right shifter (C). Note: After you press a button, it will take a moment for the gears to reach the selected setting.

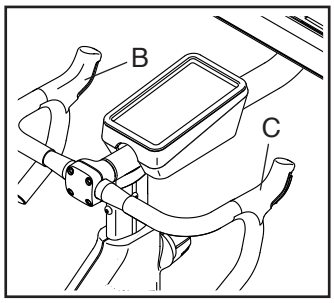

   Note: The default gear setting is 11–25T 11 Speed. You can customize the gear setting if desired. Touch the workout settings icon in the lower-right corner of the screen, touch *Features,* and then touch *Gears.* Then, select the desired options for the front gears and the rear gears.

5. **Change the incline of the frame as desired.**

   To change the incline of the frame, touch the incline buttons on the left side of the screen. Note: After you touch a button, it will take a moment for the incline to change.

   Note: To turn on and turn off the incline buttons, touch *incline* at the bottom of the screen or touch the workout settings icon in the lower-right corner of the screen and then touch *Controls.*

   You can also change the incline with the left and right shifters. To decrease the incline, press and hold the upper button on the left shifter and then press the lower button. To increase the incline, press and hold the upper button on the right shifter and then press the lower button.

6. **Use the Constant Watts feature if desired.**

   The Constant Watts feature enables you to set a target power output. This feature is available only while you are using the manual mode. Touch the workout settings icon in the lower-right corner of the screen, touch *Features,* and then touch *Constant Watts.* Then, touch the X in the lower-right corner of the screen. The Constant Watts widget will appear. Adjust the target power output if desired.

   As you pedal, the pedaling resistance will automatically increase and decrease to keep your power output at the target level. If you manually change the gears, the Constant Watts feature will be paused. To restart the Constant Watts feature, touch *Resume.*

7. **Follow your progress.**

   The console offers several display modes. Touch the workout settings icon in the lower-right corner of the screen to turn on and turn off options such as *Metrics* and *Charts.*

   To adjust the volume level, touch the workout settings icon in the lower-right corner of the screen and then touch *Audio.*

8. **Pause or end the workout.**

   To pause the workout, touch the pause symbol next to the word *Workout* at the bottom of the screen. To continue the workout, touch *Resume* on the screen.

   To end the workout, touch the pause symbol next to the word *Workout* on the screen and then touch *End.* A workout summary will appear. Touch the X in the upper-left corner of the screen to return to the home screen.

9. **When you are finished exercising, turn off the console (see page 16).**

HOW TO USE A FEATURED WORKOUT

To use a featured workout, the console must be connected to a wireless network (see page 22).

1. **Select the home screen or the workout library.**

   When you turn on the console, the home screen will appear after the console boots up. If you have already selected a workout, touch the screen and follow the prompts to end the workout and return to the home screen.

2. **Select a workout.**

   To select a workout, slide or flick the screen to scroll vertically or horizontally to see all available workouts. You can also touch the *Search* icon on the left side of the screen and search for workouts by categories such as duration, environment, trainers, and so forth. Then, touch the desired workout image on the screen.

   The featured workouts on your console will change periodically. To save a featured workout for future use, add it as a favorite by touching the favorites button (heart symbol). Note: You must be logged in to your iFIT account to save a featured workout (see step 2 on page 21).

   When you select a workout, the screen will show an overview of the workout with details such as the duration and distance of the workout and the estimated number of calories that you will burn during the workout. **IMPORTANT: The calorie goal shown in the workout description is only an estimate.** The actual number of calories that you burn will depend on various factors.

3. **Get ready for the workout.**

   To use the fan, your Bluetooth headphones, or a compatible heart rate monitor, see page 24.

4. **Start the workout.**

   Touch *Start workout* and begin pedaling. A warm-up period will begin. Pedal until the warm-up period ends or touch *Skip warmup*.

   During some workouts, an iFIT trainer will guide you through an immersive video workout. Touch the workout settings icon in the lower-right corner of the screen and then touch *Audio* to select music, trainer voice, and volume options for the workout.

   During some workouts, the screen will show a map of the route and a marker indicating your progress. Touch the buttons on the screen to select the desired map options.

   During the workout, the incline of the frame will change automatically according to the settings of the workout. **If the incline is too high or too low,** you can manually override the setting (see step 5 on page 17). To return to the programmed settings of the workout, touch *Follow Trainer*.

   If the SmartAdjust feature is enabled, the console will scale the intensity of the workout automatically based on your manual overrides of the incline setting. **To enable the SmartAdjust feature,** touch the workout settings icon in the lower-right corner of the screen, touch *Features,* and then touch *SmartAdjust.*

During the workout, you can use the shifters on the handlebar to change gears. The gears are changed only manually during featured workouts.

To follow your progress, see step 7 on page 17.

To pause or end the workout, see step 8 on page 18.

5. **When you are finished exercising, turn off the console (see page 16).**

HOW TO CREATE A DRAW-YOUR-OWN-MAP WORKOUT

To use a draw-your-own-map workout, you must be logged in to your iFIT account (see step 2 on page 20) and the console must be connected to a wireless network (see page 22).

1. **Select the home screen.**

   When you turn on the console, the home screen will appear after the console boots up. If you have already selected a workout, touch the screen and follow the prompts to end the workout and return to the home screen.

   To select a draw-your-own-map workout, touch *Create* on the left side of the screen and then touch *Create Map Workout.*

2. **Draw a workout on the map.**

   Navigate to the area on the map where you want to draw a workout by typing in the search box or by sliding your fingers on the screen. Touch the screen to add the starting point for the workout. Then, touch the screen to add the ending point for the workout.

   If you want to start and end the workout at the same point, touch *Close Loop* or *Out & Back* in the map options. You can also select whether you want the workout to snap to the road.

   If you make a mistake, touch *Undo* in the map options.

   The screen will display the elevation and distance statistics for the workout.

3. **Save the workout.**

   Touch the options on the screen to save the workout. If desired, enter a title and description for the workout.

4. **Get ready for the workout.**

   To use the fan, your Bluetooth headphones, or a compatible heart rate monitor, see page 23.

5. **Start the workout.**

   Touch *Start workout* and begin pedaling. A warm-up period will begin. Pedal until the warm-up period ends or touch *Skip warmup*.

   The workout will function in the same way as a featured workout (see step 4 on page 18).

6. **When you are finished exercising, turn off the console (see page 16).**

HOW TO USE AN IFIT WORKOUT

To use an iFIT workout, you must be logged in to your iFIT account and the console must be connected to a wireless network. **For more information about iFIT, go to iFIT.com.**

1. **Select the home screen.**

   When you turn on the console, the home screen will appear after the console boots up. If you have already selected a workout, touch the screen and follow the prompts to end the workout and return to the home screen.

2. **Log in to your iFIT account.**

   If you have not done so, touch the console settings button (gear icon) on the screen and then touch *Membership* to log in to your iFIT account. Follow the prompts on the screen to enter your username and password.

   Note: To switch users within your iFIT account, select the home screen and then touch the circular icon in the lower-left corner of the screen. If more than one user is associated with the account, a list of users will appear. Touch the name of the desired user.

3. **Select an iFIT workout from the home screen or the workout library.**

   To select an iFIT workout, slide or flick the screen to scroll vertically or horizontally to see all available workouts. You can also touch the *Search* icon on the left side of the screen and search for workouts by categories such as duration, location, trainer, and so forth. Then, touch the desired workout image on the screen.

   When you select an iFIT workout, the screen will show an overview of the workout that includes details such as the duration and distance of the workout and the estimated number of calories that you will burn during the workout.

   You can also select options such as adding the workout to your schedule (see step 4) or marking the workout as a favorite (see step 5).

4. **Schedule an iFIT workout on the calendar if desired.**

   To schedule an iFIT workout for a future date, simply view the overview or workout summary of the desired iFIT workout, touch the calendar icon, and then select the desired date on the calendar. When the selected date arrives, the iFIT workout that you scheduled will appear on the home screen.

5. **Create a list of favorite iFIT workouts if desired.**

   To mark an iFIT workout as a favorite, simply view the overview or workout summary of the desired iFIT workout and touch the favorites button (heart symbol).

   To view a list of iFIT workouts that you have marked as favorites, touch the heart icon at the top of the home screen.

6. **Get ready for the workout.**

   To use the fan, your Bluetooth headphones, or an optional heart rate monitor, see page 23.

7. **Start the workout.**

   Touch *Start workout* and begin pedaling. A warm-up period will begin. Pedal until the warm-up period ends or touch *Skip warmup*.

   The workout will function in the same way as a featured workout (see step 4 on page 18).

8. **When you are finished using the studio cycle, turn off the console (see page 16).**

HOW TO CHANGE CONSOLE SETTINGS

1. **Select the console settings menu.**

   When you turn on the console, the home screen will appear after the console boots up. If you have already selected a workout, touch the screen and follow the prompts to end the workout and return to the home screen.

   Then, touch the console settings button (gear icon) on the screen.

2. **Navigate the console settings menu.**

   You may be able to view and change settings in the following settings menus:

   Your account
   - Account info, password
   - Health details

   Preferences
   - Wi-Fi
   - Units of measurement
   - Time zone
   - Language
   - iFIT AI Coach

   Workout
   - Heart Rate

   Equipment
   - About
   - Software Update
   - Calibrate

   Membership
   - Manage membership
   - Plan profiles

   Support
   - Help
   - How To
   - Legal

3. **Customize settings.**

   The console can display speed and distance in either Imperial (standard) or metric units of measurement. To change the unit of measurement or to change other settings, touch *Preferences* or *Equipment* and then touch the desired settings.

4. **Update the console software.**

   For the best results, regularly check for software updates. Touch *Equipment* and then touch *Software update*. Software updates will begin automatically. **IMPORTANT: To avoid damaging the studio cycle, do not press the power switch or unplug the power adapter while the software is being updated.**

   When the update is complete, the console will turn off and then turn back on. If it does not, unplug the power adapter, wait for several seconds, and then plug in the power adapter. Note: Software updates are always designed to improve your workout experience. After a software update, some settings and features described in this manual may no longer apply to your console, and your console may have new settings and features.

5. **Calibrate the incline system.**

   To calibrate the incline system, touch *Equipment*, touch *Calibrate*, and then touch *Calibrate*. The frame will automatically rise to the maximum incline level, descend to the minimum incline level, and then return to the starting position. This will calibrate the incline system. When the incline system is calibrated, touch *Finish*.

6. **Exit the console settings menu.**

   To exit the console settings menu, touch the X in the upper-left corner of the screen.

HOW TO CHANGE WORKOUT SETTINGS

1. **Select the workout settings menu.**

   Touch the workout settings icon in the lower-right corner of the screen.

2. **Navigate the workout settings menu and customize workout settings.**

   You may be able to view and change settings in the following menus:

   Audio
   - App volume
   - Speaker volume

   Fan

   Bluetooth

   Features
   - SmartAdjust
   - Constant Watts

   Display
   - iFIT Closed Captions
   - Screen brightness

   Gears

   Note: Some workout controls are disabled when no workout is running.

3. **Exit the workout settings menu.**

   To exit the workout settings menu, touch the X in the lower-right corner of the screen.

HOW TO CONNECT TO A WIRELESS NETWORK

1. **Select the console settings menu.**

   With the home screen selected, touch the console settings button (gear icon) on the screen and then touch *Preferences.*

2. **Set up and manage a wireless network connection.**

   Touch *Wi-Fi* to select the wireless network menu. If *Wi-Fi* is not enabled, touch the *Wi-Fi* toggle to enable it. When Wi-Fi is enabled, the screen will show a list of available networks. Note: It may take a moment for the list of wireless networks to appear.

   Note: You must have your own wireless network and an 802.11b/g/n router with SSID broadcast enabled (hidden networks are not supported). The console supports unsecured and secured (WEP, WPA™, and WPA2™) encryption. A broadband connection is recommended; performance depends on connection speed.

   When a list of networks appears, touch the desired network. Note: You will need to know your network name (SSID). If your network has a password, you will also need to know the password. Follow the prompts on the screen to enter your password and connect to the selected wireless network. Passwords are case-sensitive.

   When the console is connected to your wireless network, a confirmation message will appear on the screen.

   If you have problems connecting to an encrypted network, make sure that your password is correct. **If you have questions after following these instructions, please go to my.iFIT.com for assistance.**

3. **Exit the console settings menu.**

   To exit the console settings menu, touch the X in the upper-left corner of the screen.

HOW TO USE THE FAN

The fan has several speed settings, including an auto mode. While the auto mode is selected, the speed of the fan will automatically change as the pedaling speed changes. To control the fan, touch the workout settings icon in the lower-right corner of the screen and then touch *Fan.*

Note: If the pedals are not moved for a while, the fan will turn off automatically.

HOW TO USE THE CHARGING PORT

The console features a charging port to charge USB-C compatible devices, such as smartphones and tablets, while you exercise.

To use the charging port, plug a USB-C charging cable (not included) into the receptacle on your device and into the charging port on the right side of the console; **make sure that the USB-C charging cable is fully plugged in.** Note: The charging port cannot be used to view or transfer data or to play music through the console sound system.

HOW TO CONNECT HEADPHONES

To connect your Bluetooth headphones to the console, first turn on your headphones, put them in pairing mode, and place them near the console. Next, start a workout. Then, touch the workout settings icon in the lower-right corner of the screen, touch *Bluetooth,* and select your headphones from the list on the screen.

When your headphones and the console pair successfully, the audio from the console will play through your headphones.

HOW TO USE AN OPTIONAL HEART RATE MONITOR

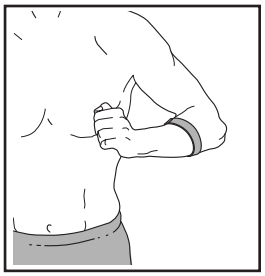

Whether your goal is to burn fat or to strengthen your cardiovascular system, the key to achieving the best results is to maintain the proper heart rate during your workouts. The optional heart rate monitor will enable you to continuously monitor your heart rate while you exercise, helping you to reach your personal fitness goals. The console is compatible with all Bluetooth® Smart heart rate monitors. **To purchase an optional heart rate monitor, please see the front cover of this manual.**

When your compatible heart rate monitor is turned on and placed in pairing mode, the console will connect to it automatically. When your heartbeat is detected, your heart rate will be shown on the screen.

MAINTENANCE AND TROUBLESHOOTING

MAINTENANCE

Regular maintenance is important for optimal performance and to reduce wear. Inspect and properly tighten all parts each time the studio cycle is used. **Replace any worn parts immediately.** Use only manufacturer-supplied parts.

To clean the studio cycle, use a damp cloth and a small amount of mild soap. **IMPORTANT: To avoid damage to the console, keep liquids away from the console and keep the console out of direct sunlight.**

PEDAL MAINTENANCE

Tighten the pedals weekly. Tighten the **right** pedal **clockwise**, and tighten the **left** pedal **counterclockwise**.

TROUBLESHOOTING

Some problems can be solved with the simple steps in this section. If further assistance is needed, please see the front cover of this manual.

CONSOLE TROUBLESHOOTING

If the console does not turn on, make sure that the power adapter is fully plugged in and that the power switch is pressed on.

If a replacement power adapter is needed, please see the back cover of this manual. IMPORTANT: To avoid damaging the console, use only a manufacturer-supplied regulated power adapter.

If you are having problems connecting the console to a wireless network or if you are having problems with your iFIT account or iFIT workouts, go to support.iFIT.com.

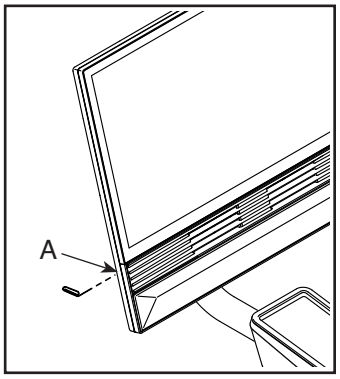

If the console does not boot up properly, or if the console freezes and does not respond, reset the console to the factory default settings. **IMPORTANT: Doing this will erase all custom settings you have made to the console.** Resetting the console requires two people. First, press the power switch and unplug the power adapter. Next, locate the small reset opening (A) on the left side of the console. Using a bent paper clip, press and hold the reset button inside of the opening, and have a second person plug in the power adapter and press the power switch. **Continue holding the reset button until the console turns on.** When the reset operation is complete, the console will turn off and then turn back on. If it does not, press the power switch and unplug the power adapter, and then plug it in again and press the power switch. Once the console turns on, check for firmware updates (see HOW TO CHANGE CONSOLE SETTINGS on page 21). Note: It may take a moment for the console to be ready for use.

HOW TO ADJUST THE CONSOLE PIVOT AND TILT

If the console does not stay in place when it is moved from side to side, first remove the Mount Cover (144). Next, use the included studio cycle tool to tighten the Pivot Nut (143) slightly until the console stays in place when moved from side to side. Then, press the Mount Cover back into place.

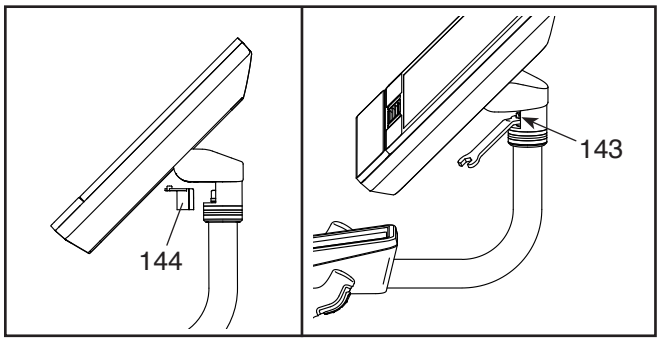

If the console does not stay in place when it is tilted upward and downward, **first see assembly step 12 on page 11.** Use a standard screwdriver to carefully pry off the Upper Console Cover (146) and then the Lower Console Cover (145).

Note: For clarity, the console is not shown in the drawing at the right. Next, tighten the four M6 x 15mm Cap Screws (148) in the Rear Bracket Mount (114) until the upward and downward movement no longer feels loose. If necessary, tilt the console upward and downward to access the Cap Screws.

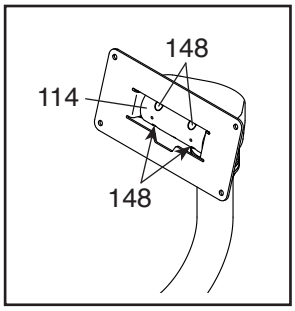

Then, see assembly step 12 on page 11 and reattach the Console Covers (145, 146).

INCLINE SYSTEM TROUBLESHOOTING

If the frame does not move to the correct incline level, see HOW TO CHANGE CONSOLE SETTINGS on page 21 and calibrate the incline system.

HOW TO ADJUST THE LEFT CRANK ARM

If the Left Crank Arm (21) feels loose while you are pedaling, first loosen the two M6 x 25mm Screws (96). Then, follow the steps below. Note: If you have a torque wrench, tighten the Screws (15, 96) to the listed torque specs. If you do not have a torque wrench, tighten the Screws as firmly as you can.

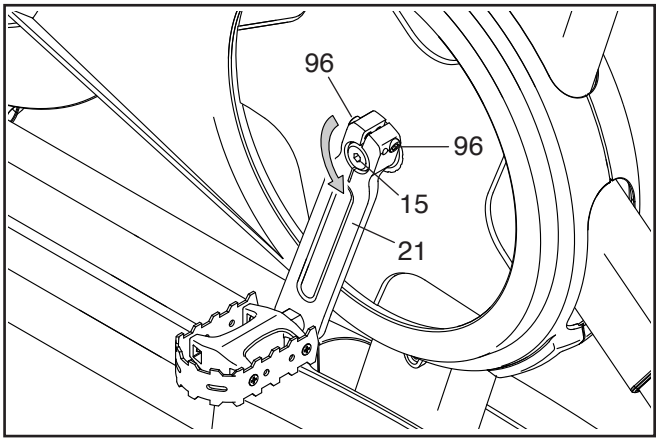

1. Tighten the M12 Crank Screw (15) **counter-clockwise** to 7 Nm (5 ft-lbs).

2. Tighten each M6 x 25mm Screw (96) to 20 Nm (15 ft-lbs). Then, tighten each M6 x 25mm Screw a second time to 20 Nm (15 ft-lbs) in the same order.

3. Finally, tighten the M12 Crank Screw (15) **counter-clockwise** to 50 Nm (37 ft-lbs).

HOW TO ADJUST THE REED SWITCH

If the console does not display correct feedback, the reed switch should be adjusted.

To adjust the reed switch, **first press the power switch and unplug the power adapter.** Next, remove the three indicated M4 x 16mm Screws (17) from the Right and Left Shields (30, 32).

Then, carefully pull the tops of the Right and Left Shields (30, 32) apart a few inches.

See the inset drawing. Slightly loosen the two indicated #8 x 1/2" Screws (57). Next, rotate the Left Crank Arm (21) until a Pulley Magnet (137) is aligned with the Reed Switch (115). Slide the Reed Switch slightly toward or away from the Pulley Magnet. Then, retighten the Screws.

Plug in the power adapter, press the power switch, and rotate the Left Crank Arm (21) for a moment. Repeat these actions until the console displays correct feedback.

When the reed switch is correctly adjusted, reattach the Right and Left Shields (30, 32).

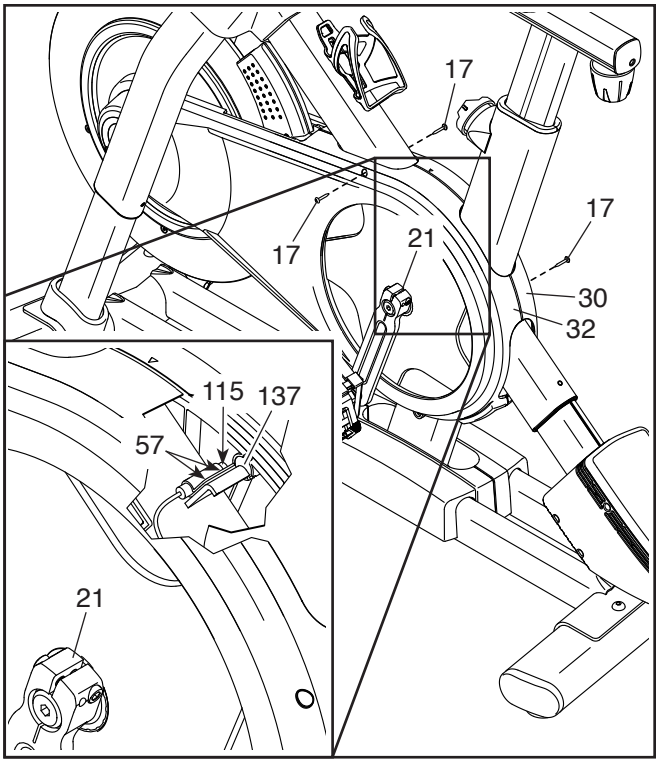

HOW TO ADJUST THE DRIVE BELT

If you can feel the pedals slip while you are pedaling the drive belt may need to be adjusted.

To adjust the drive belt, **first press the power switch and unplug the power adapter.** Then, follow the instructions below. Note: The drawings show only the right side of the studio cycle.

Remove the indicated M4 x 16mm Screw (17) and the Shield Cover (31) from each side of the studio cycle.

Next, loosen the M10 Axle Nut (27) on each side of the studio cycle, and tighten the Adjustment Nut (26) on each side of the studio cycle **one half turn.** Then, firmly retighten the M10 Axle Nuts.

Plug in the power adapter, press the power switch, and pedal the studio cycle to test the adjustment. If necessary, repeat the above actions until the pedals no longer slip.

When the drive belt is properly adjusted, reattach the shield covers.

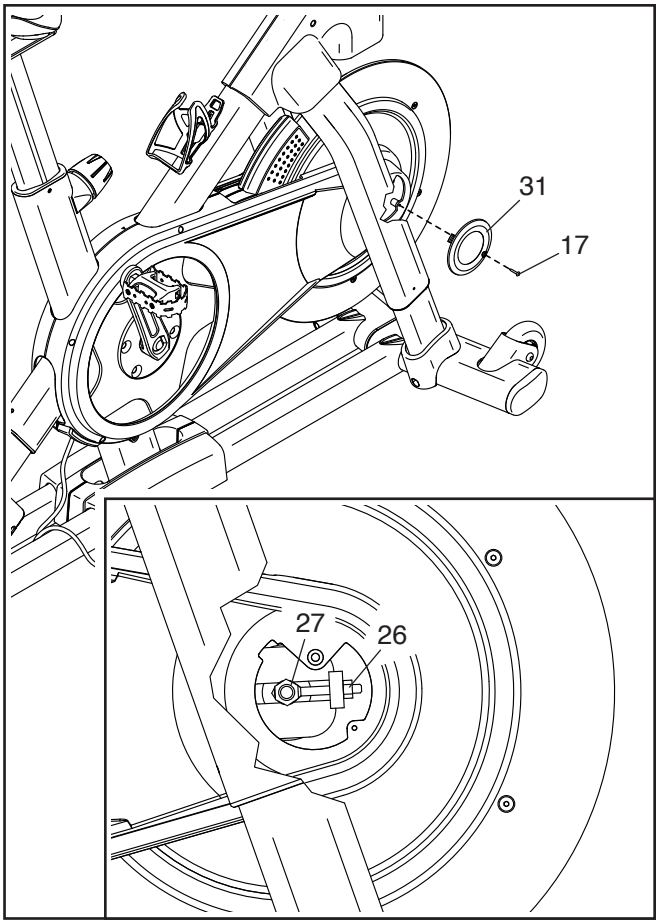

EXERCISE GUIDELINES

⚠WARNING: Before beginning this or any exercise program, consult your physician. This is especially important for persons over age 35 or persons with pre-existing health problems.

These guidelines will help you to plan your exercise program. For detailed exercise information, obtain a reputable book or consult your physician. Remember, proper nutrition and adequate rest are essential for successful results.

EXERCISE INTENSITY

Whether your goal is to burn fat or to strengthen your cardiovascular system, exercising at the proper intensity is the key to achieving results. You can use your heart rate as a guide to find the proper intensity level. The chart below shows recommended heart rates for fat burning and aerobic exercise.

165	*155*	*145*	*140*	*130*	*125*	*115*	♥♥♥
145	*138*	*130*	*125*	*118*	*110*	*103*	♥♥
125	*120*	*115*	*110*	*105*	*95*	*90*	♥
20	*30*	*40*	*50*	*60*	*70*	*80*	

To find the proper intensity level, find your age at the bottom of the chart (ages are rounded off to the nearest ten years). The three numbers listed above your age define your "training zone." The lowest number is the heart rate for fat burning, the middle number is the heart rate for maximum fat burning, and the highest number is the heart rate for aerobic exercise.

Burning Fat—To burn fat effectively, you must exercise at a low intensity level for a sustained period of time. During the first few minutes of exercise, your body uses carbohydrate calories for energy. Only after the first few minutes of exercise does your body begin to use stored fat calories for energy. If your goal is to burn fat, adjust the intensity of your exercise until your heart rate is near the lowest number in your training zone. For maximum fat burning, exercise with your heart rate near the middle number in your training zone.

Aerobic Exercise—If your goal is to strengthen your cardiovascular system, you must perform aerobic exercise, which is activity that requires large amounts of oxygen for prolonged periods of time. For aerobic exercise, adjust the intensity of your exercise until your heart rate is near the highest number in your training zone.

HOW TO MEASURE YOUR HEART RATE

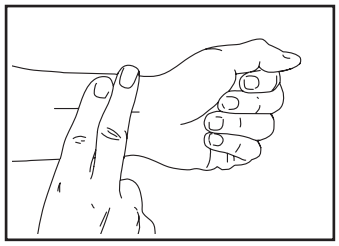

To measure your heart rate, exercise for at least four minutes. Then, stop exercising and place two fingers on your wrist as shown. Take a six-second heartbeat count, and multiply the result by 10 to find your heart rate. For example, if your six-second heartbeat count is 14, your heart rate is 140 beats per minute.

WORKOUT GUIDELINES

Warming Up—Start with 5 to 10 minutes of stretching and light exercise. A warm-up increases your body temperature, heart rate, and circulation in preparation for exercise.

Training Zone Exercise—Exercise for 20 to 30 minutes with your heart rate in your training zone. (During the first few weeks of your exercise program, do not keep your heart rate in your training zone for longer than 20 minutes.) Breathe regularly and deeply as you exercise; never hold your breath.

Cooling Down—Finish with 5 to 10 minutes of stretching. Stretching increases the flexibility of your muscles and helps to prevent post-exercise problems.

EXERCISE FREQUENCY

To maintain or improve your condition, complete three workouts each week, with at least one day of rest between workouts. After a few months of regular exercise, you may complete up to five workouts each week, if desired. Remember, the key to success is to make exercise a regular and enjoyable part of your everyday life.

SUGGESTED STRETCHES

The correct form for several basic stretches is shown at the right. Move slowly as you stretch—never bounce.

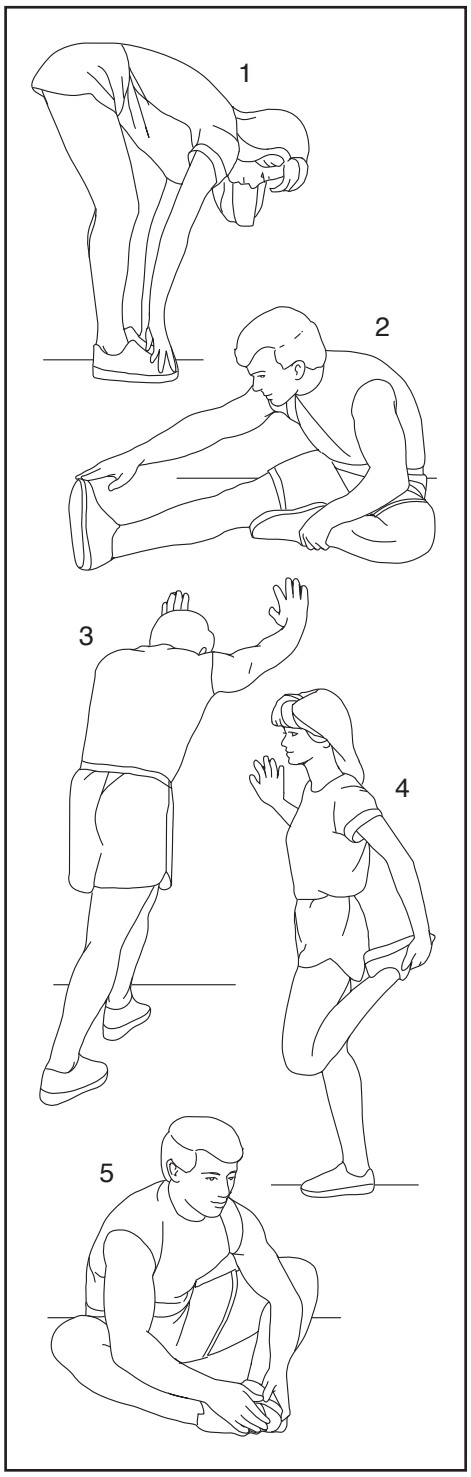

1. Toe Touch Stretch

Stand with your knees bent slightly and slowly bend forward from your hips. Allow your back and shoulders to relax as you reach down toward your toes as far as possible. Hold for 15 counts, then relax. Repeat 3 times. Stretches: Hamstrings, back of knees and back.

2. Hamstring Stretch

Sit with one leg extended. Bring the sole of the opposite foot toward you and rest it against the inner thigh of your extended leg. Reach toward your toes as far as possible. Hold for 15 counts, then relax. Repeat 3 times for each leg. Stretches: Hamstrings, lower back and groin.

3. Calf/Achilles Stretch

With one leg in front of the other, reach forward and place your hands against a wall. Keep your back leg straight and your back foot flat on the floor. Bend your front leg, lean forward and move your hips toward the wall. Hold for 15 counts, then relax. Repeat 3 times for each leg. To cause further stretching of the achilles tendons, bend your back leg as well. Stretches: Calves, achilles tendons and ankles.

4. Quadriceps Stretch

With one hand against a wall for balance, reach back and grasp one foot with your other hand. Bring your heel as close to your buttocks as possible. Hold for 15 counts, then relax. Repeat 3 times for each leg. Stretches: Quadriceps and hip muscles.

5. Inner Thigh Stretch

Sit with the soles of your feet together and your knees outward. Pull your feet toward your groin area as far as possible. Hold for 15 counts, then relax. Repeat 3 times. Stretches: Quadriceps and hip muscles.

NOTES

PART LIST

Model No. NTEXTDF25-INT.0 R1224B

Key No.	Qty.	Description
1	1	Frame
2	1	Base
3	1	Power Switch
4	1	Roller Axle
5	1	M6 Shoulder Screw
6	2	Inner Leg Sleeve
7	1	Handlebar Post
8	1	Console Support
9	1	M8 x 32mm Screw
10	1	Console
11	1	Console Bracket
12	6	M4 x 8mm Screw
13	1	Saddle Post
14	1	Tray Base
15	1	M12 Crank Screw
16	1	Pulley
17	29	M4 x 16mm Screw
18	4	M10 x 20mm Flat Head Bolt
19	1	Crank/Right Crank Arm
20	1	Pivot Axle
21	1	Left Crank Arm
22	1	Flywheel Assembly
23	1	Handlebar Bracket
24	2	Pivot Bushing
25	1	Drive Belt
26	2	Adjustment Assembly
27	2	M10 Axle Nut
28	2	Post Clamp
29	1	Right Base Cover
30	1	Right Lower Shield
31	2	Shield Cover
32	1	Left Lower Shield
33	1	Right Disc
34	1	Right Incline Motor Cover
35	1	Left Incline Motor Cover
36	1	Upper Incline Motor Cover
37	1	Left Disc
38	1	Accessory Tray
39	1	Handlebar Post Cap
40	1	Right Upper Shield
41	1	M8 Saddle Screw
42	2	Inner Clamp
43	2	Carriage Cap
44	3	One-wire Grommet
45	1	Right Saddle Post Sleeve
46	1	Left Saddle Post Sleeve
47	1	Right Handlebar Post Sleeve
48	1	Left Handlebar Post Sleeve
49	2	Wheel
50	1	Adjustment Arm
51	1	Resistance Disc
52	1	Saddle Bracket
53	1	Saddle Axle
54	1	Saddle
55	4	Anchored Zip Tie
56	1	Handlebar Tape Kit
57	16	#8 x 1/2" Screw
58	1	Upper Leg
59	2	Lower Leg
60	4	#8 x 1/3" Screw
61	4	M8 x 15mm Screw
62	2	Outer Leg Sleeve
63	1	Frame Bearing Set
64	2	Leg Cover
65	1	Ground Screw
66	4	Large Leg Bushing
67	1	Carriage
68	2	Leg Spacer
69	4	Small Leg Bushing
70	1	Shifter
71	1	Right Pedal
72	1	Left Pedal
73	4	M4 x 16mm Machine Screw
74	1	Shaft Cover
75	1	Shaft Cover Sleeve
76	4	Stabilizer Cap
77	2	Foot
78	2	Leveling Foot
79	1	Controller
80	1	Controller Cover
81	3	M3 x 6mm Machine Screw
82	1	Resistance Motor
83	2	M10 x 38mm Washer
84	1	M12 x 25mm Cap Screw
85	1	Post Knob Cap
86	3	Clip Nut
87	2	Incline Motor Bushing
88	1	Incline Motor Spacer
89	1	Incline Motor
90	1	Magnet Bracket
91	1	Right Magnet Bracket Cover
92	1	Left Magnet Bracket Cover
93	4	M8 x 12mm Patch Screw
94	1	M10 x 55mm Screw
95	1	O-ring
96	2	M6 x 25mm Screw
97	1	Handlebar
98	2	M8 x 50mm Bolt
99	2	M8 Locknut
100	2	Post Knob

Key No.	Qty.	Description
101	1	Carriage Knob
102	4	M6 x 15mm Socket Screw
103	4	M4 x 10mm Machine Screw
104	1	Roller
105	1	M10 Washer
106	1	Handlebar Clamp
107	2	M4 x 15mm Machine Screw
108	2	M6 Washer
109	1	Front Bracket Mount
110	1	Wire Protector
111	2	Upper/Lower Pivot Disc
112	1	Center Pivot Disc
113	2	Inner Pivot Bushing
114	1	Rear Bracket Mount
115	1	Reed Switch/Wire
116	1	Reed Switch Clip
117	1	Left Base Cover
118	1	Power Receptacle
119	1	Power Adapter
120	1	Power Cord
121	1	Tray Cover
122	1	Lower Wire
123	1	Upper Wire
124	1	Extension Wire
125	1	Control Wire
126	2	M8 x 12mm Screw
127	6	M8 Large Washer
128	2	M5 Nut
129	1	M5 x 8mm Screw
130	1	#6 x 5/8" Screw
131	1	Adjustment Block
132	2	M4 x 10mm Blunt Screw
133	2	M10 x 20mm Hex Screw
134	1	Keyed Washer
135	4	M10 Locknut
136	2	Handlebar Cap
137	2	Pulley Magnet
138	2	M6 x 15mm Screw
139	1	Water Bottle Holder
140	2	M5 x 15mm Socket Screw
141	1	Left Upper Shield
142	1	Upper Leg Axle
143	1	Pivot Nut
144	1	Mount Cover
145	1	Lower Console Cover
146	1	Upper Console Cover
147	4	Crown Fastener/Screw
148	8	M6 x 15mm Cap Screw
149	2	Outer Clamp
150	2	M6 x 25mm Saddle Screw
*	–	Assembly/Adjustment Tool Kit
*	–	User's Manual

Note: Specifications are subject to change without notice. For information about ordering replacement parts, see the back cover of this manual. *These parts are not illustrated.

EXPLODED DRAWING A

Model No. NTEXTDF25-INT.0 R1224B

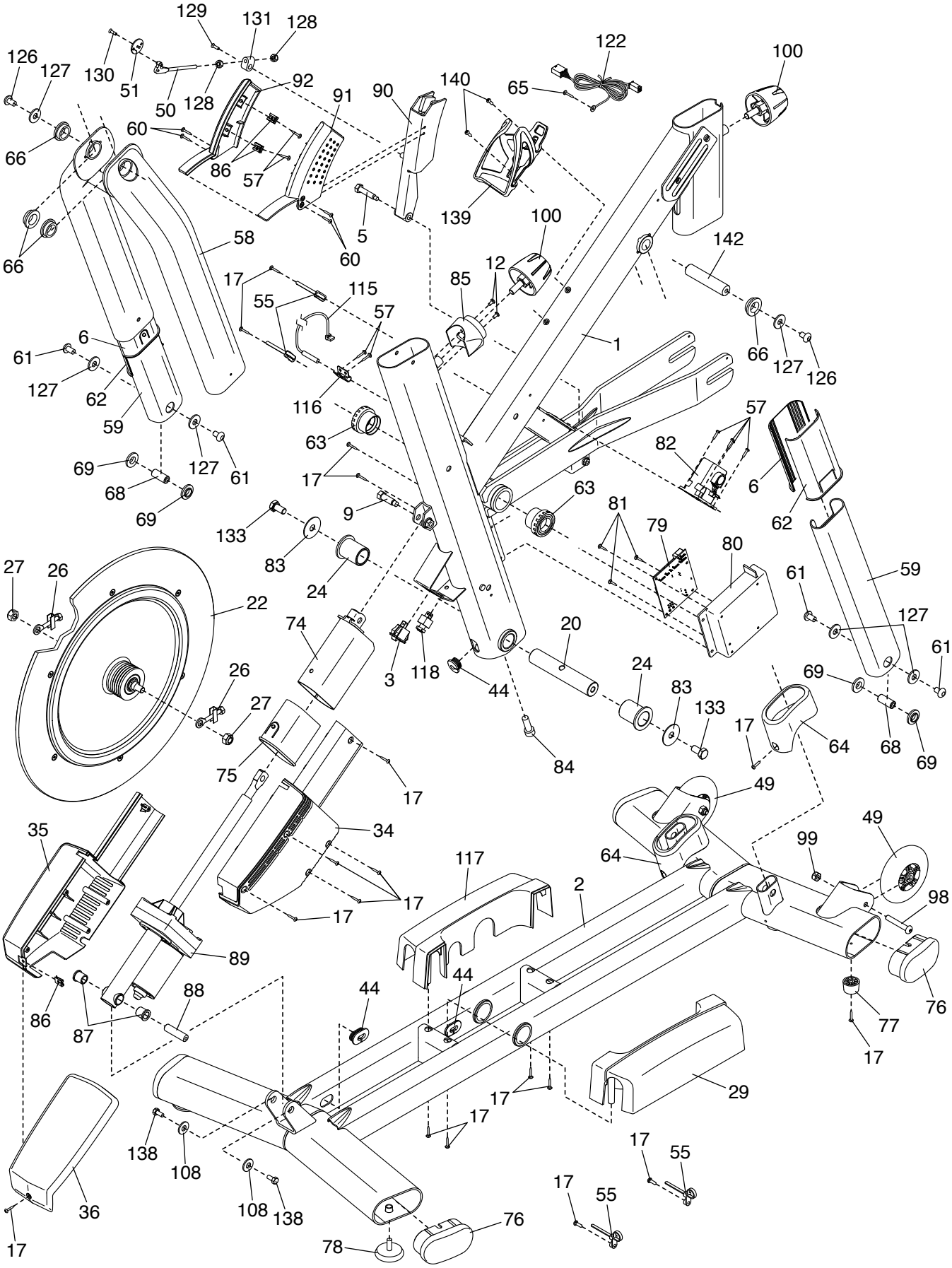

EXPLODED DRAWING B

Model No. NTEXTDF25-INT.0 R1224B

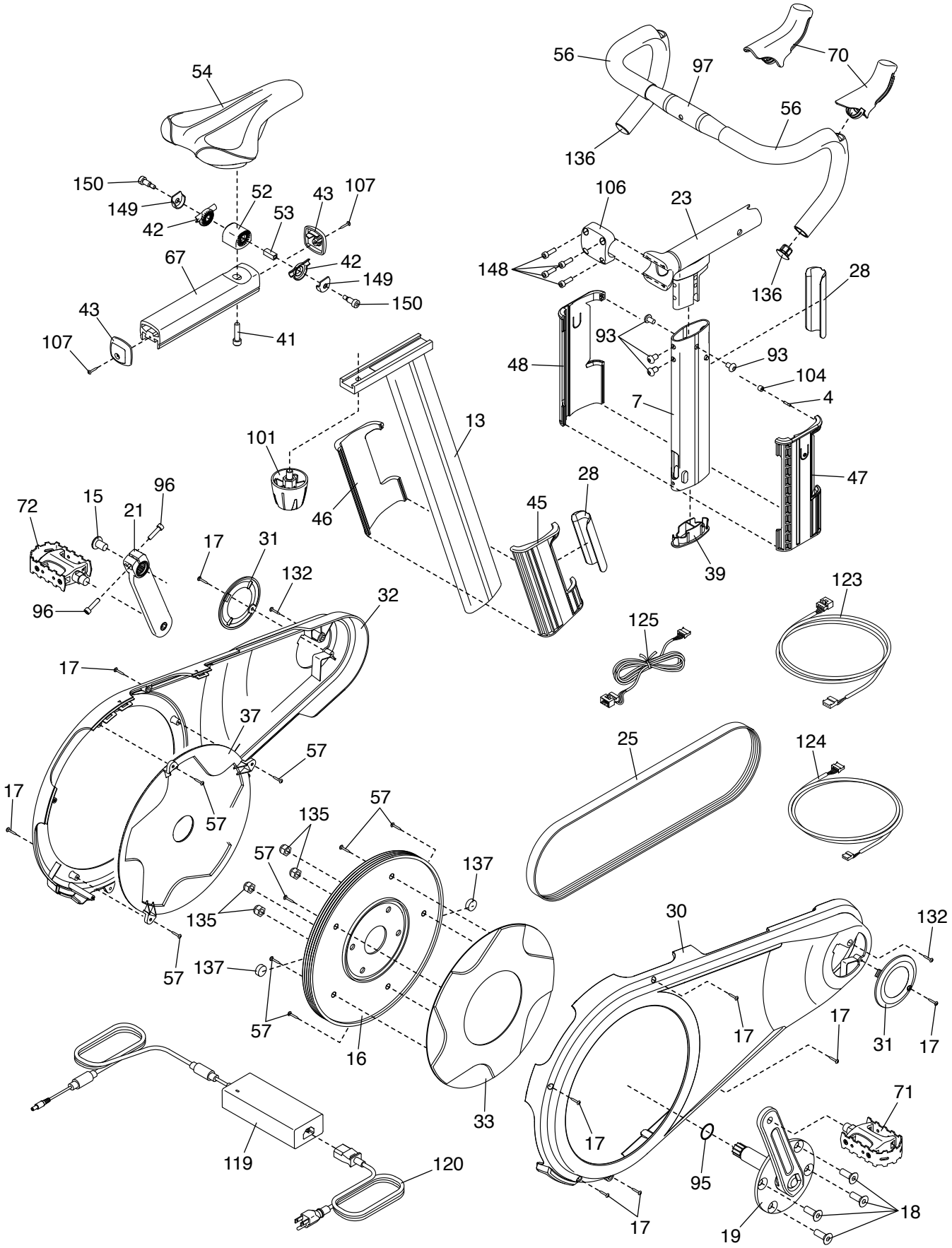

EXPLODED DRAWING C

Model No. NTEXTDF25-INT.0 R1224B

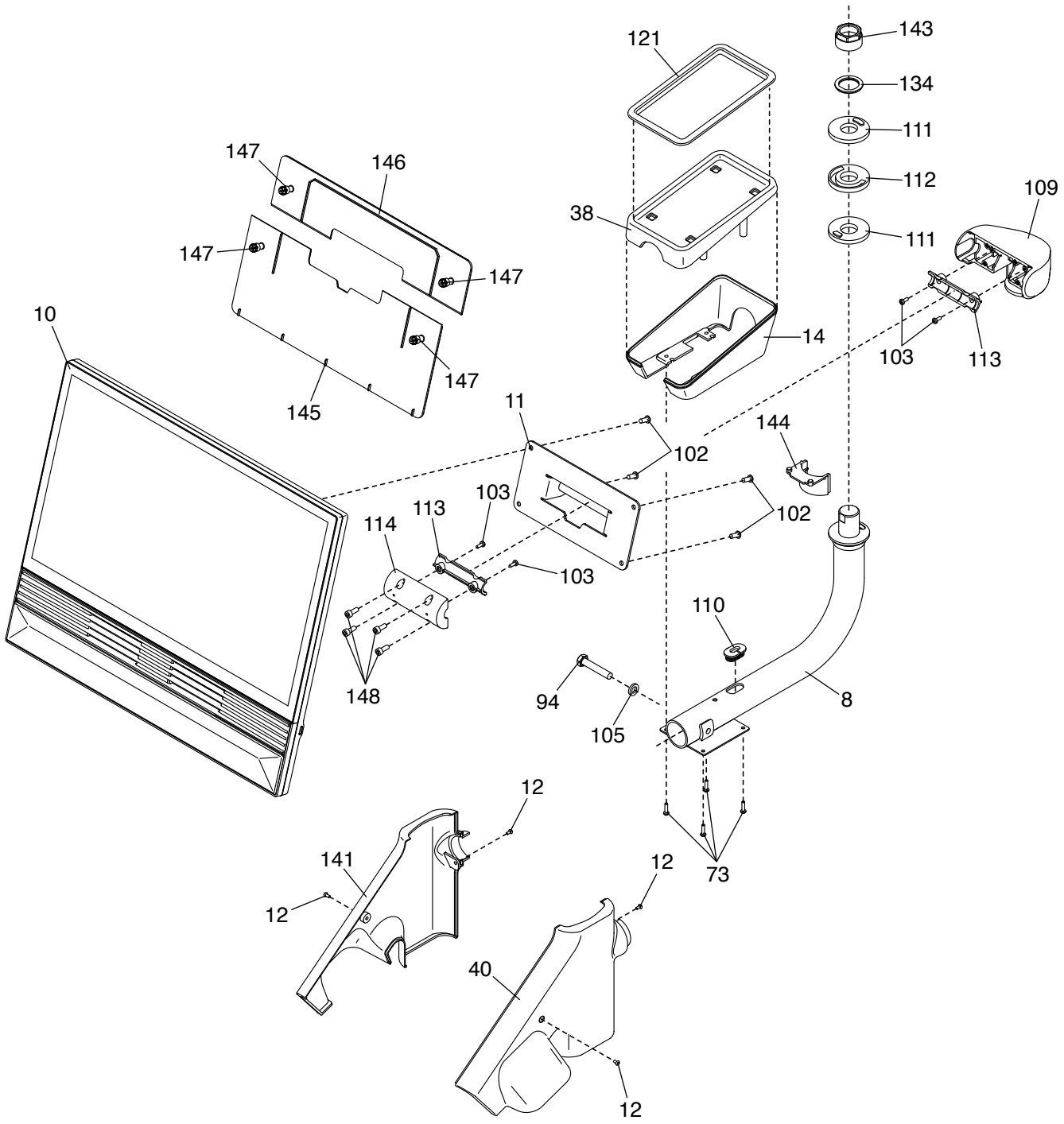

ORDERING REPLACEMENT PARTS

To order replacement parts, please see the front cover of this manual. To help us assist you, be prepared to provide the following information when contacting us:

- the model number and serial number of the product (see the front cover of this manual)
- the name of the product (see the front cover of this manual)
- the key number and description of the replacement part(s) (see the PART LIST and the EXPLODED DRAWING near the end of this manual)

RECYCLING INFORMATION

This electronic product must not be disposed of in municipal waste. To preserve the environment, this product must be recycled after its useful life as required by law.

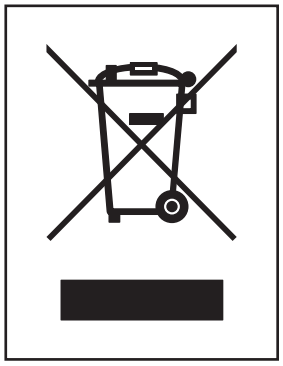

Please use recycling facilities that are authorized to collect this type of waste in your area. In doing so, you will help to conserve natural resources and improve European standards of environmental protection. If you require more information about safe and correct disposal methods, please contact your local city office or the establishment where you purchased this product.

UK/EU DECLARATION OF CONFORMITY

NTEXTDF25-INT contains the MP24-Xenon-C or MP24-Xenon-V Tablet.
Hereby, iFIT Health & Fitness declares that the radio equipment type MP24-Xenon-C or MP24-Xenon-V is in compliance with Directive 2014/53/EU and Radio Equipment Regulation 2017.
iFIT Health & Fitness, 1500 S 1000 W, Logan, UT 84320, USA
This declaration of conformity is issued under the sole responsibility of the manufacturer.
Object of the declaration: FCCID OMC453085 or OMC453584V - Broadcast Frequency Bands and Maximum EIRP power: 2.4G WIFI:25.02dBm; 5G WIFI:22.895dBm; 2.4G BT:10.12dBm.
Operations in the 5.15-5.35GHz band are restricted to indoor usage only in following Countries:

BE	BG	CZ	DK	DE	EE	IE
EL	ES	FR	HR	IT	CY	LV
LT	LU	HU	MT	NL	AT	PL
PT	RO	SI	SK	FI	SE	UK

Certification: Article 3.1a - Safety EN 62479:2010, EN 62368-1:2014/AC:2015, Article 3.1b – EMC EN 301 489-1, 2.2.3, EN 301 489-17 V3.2.4, Article 3.2 – Radio parameters EN 300 328 V2.2.2, EN 301 893 V2.1.1
UK Representative: ICON Health & Fitness Ltd, Unit 1D The Gateway, Fryers Way, Silkwood Park, Ossett, WF5 9TJ, United Kingdom
EU Representative: iFIT Health & Fitness SAS Business Park, 5 rue Alfred de Vigny, 78112 Fourqueux, France

Part No. OM-000003 R1224B

Printed in China © 2024 iFIT Inc.